ELISEO

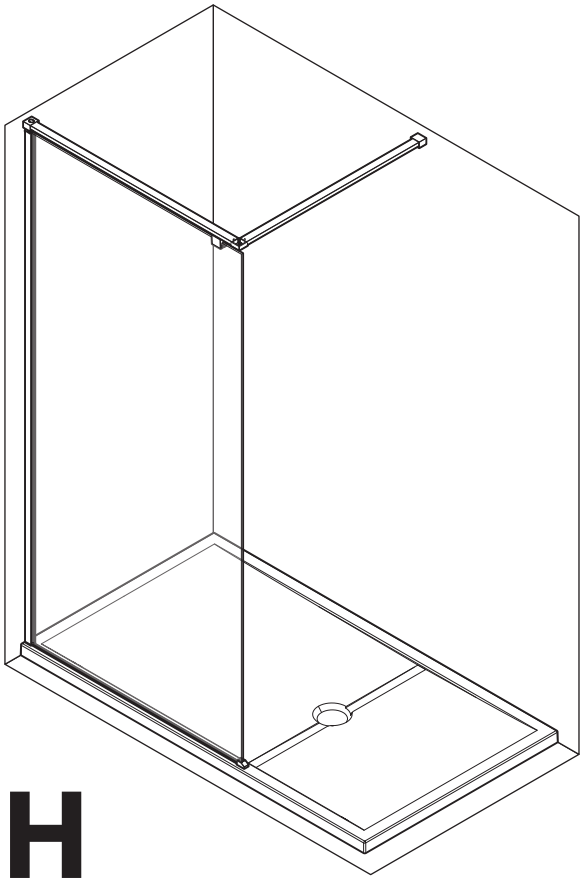

H

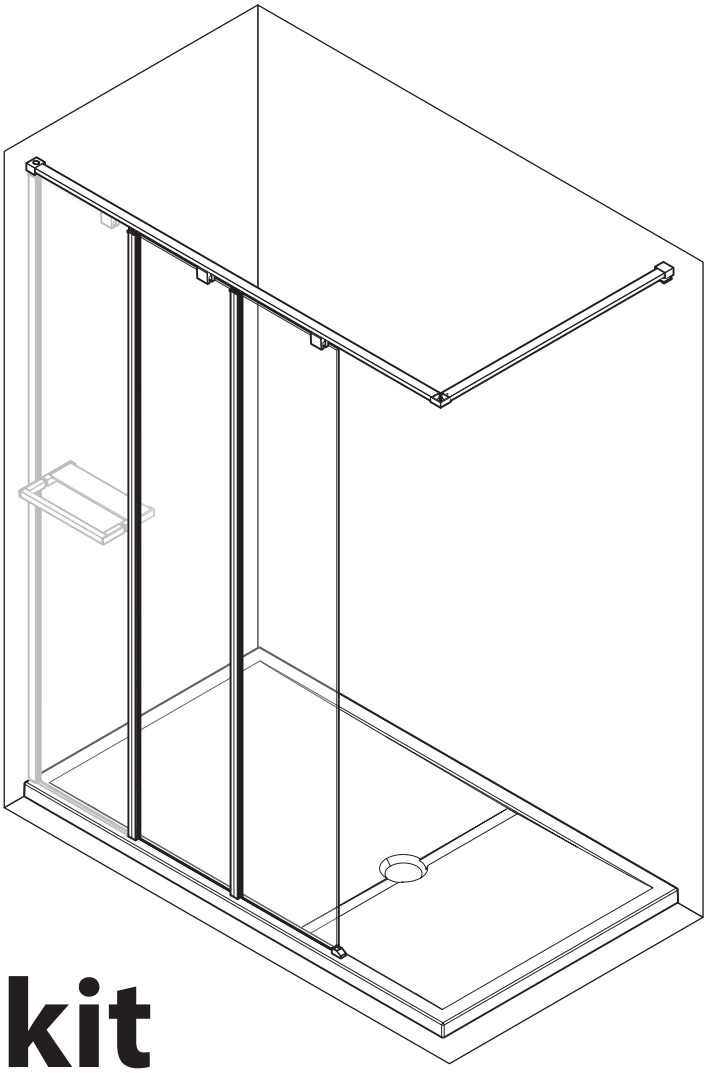

kit

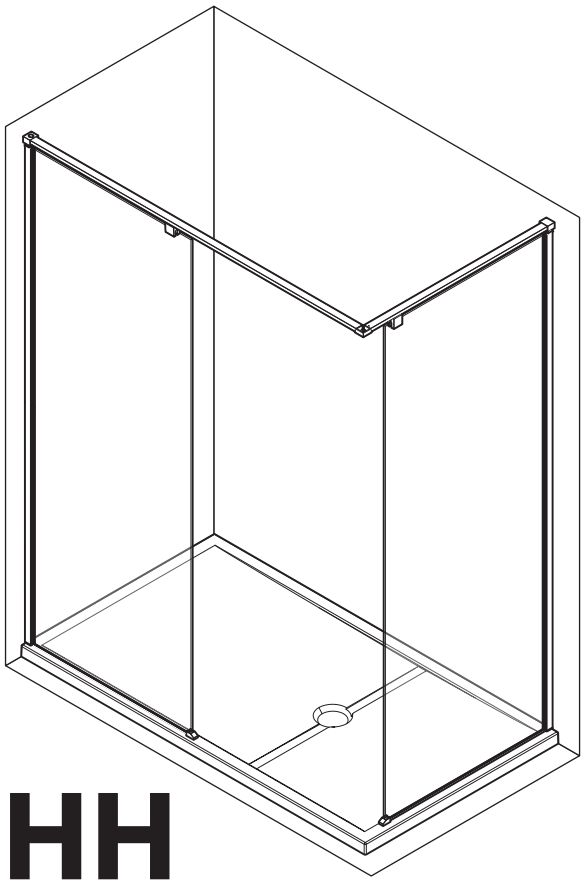

HH

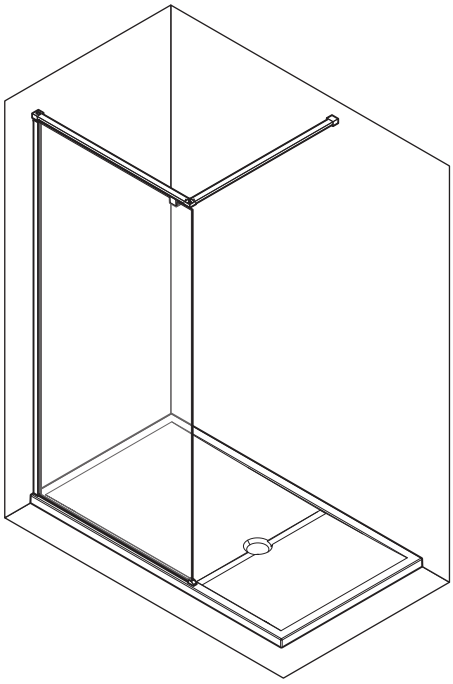

H

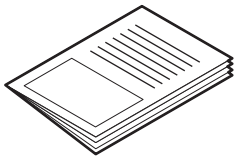

3

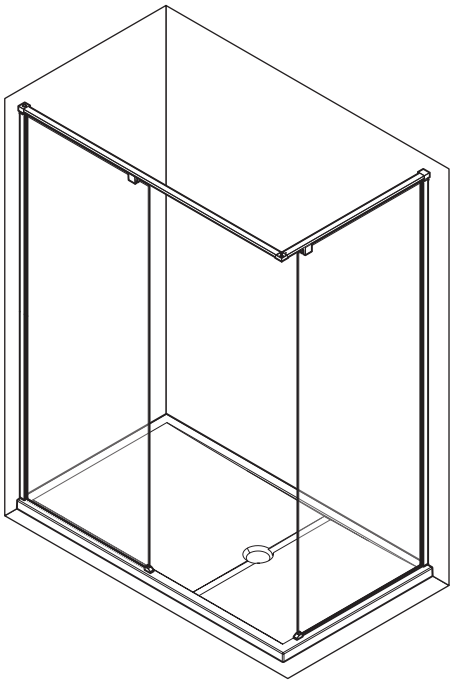

HH

kit 1 ELISHMKP1-K

kit 3 ELISHMKP3-K

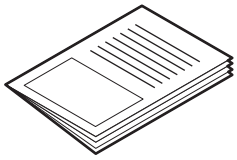

17

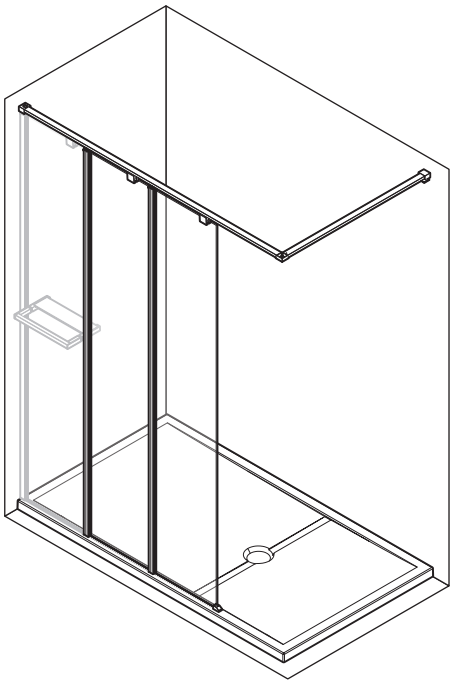

kit

kit 1 ELISHMKP1-K

kit 2 ELISHMKP2-K

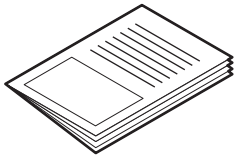

31

Eliseo H

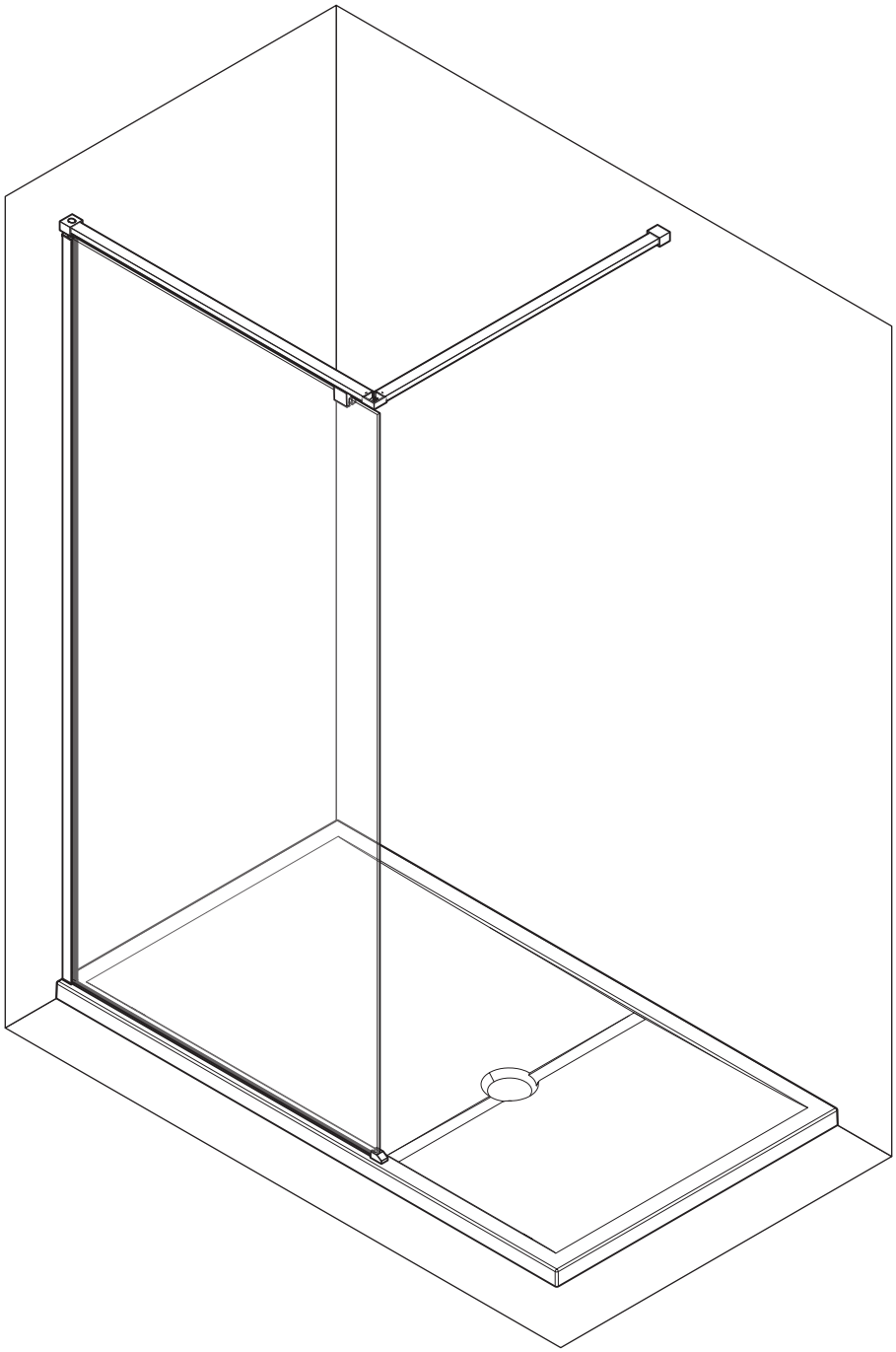

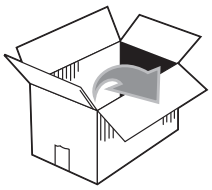

B1 x1	B2 x1	B3 x2	B4 x1	B5 x1	B6 x1
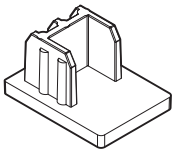	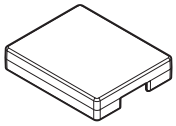	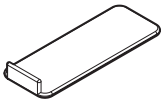	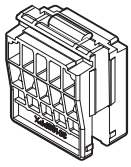	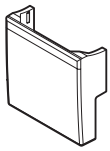	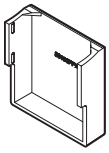

B7 x1	B8 x1	B9 x1	B10 x2	B11 x2	B12 x1
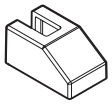		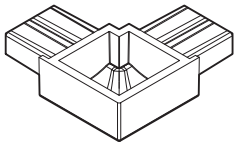	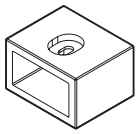		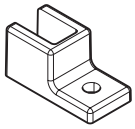

C1 x4	C2 x4	C3 x1	C4 x3	C5 x3	C6 x4	C7 x1
				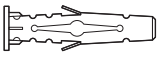		
S6	4x35	M5x8	4,5x60	FU8x50	3,5x13	M8x8

D1 x1	D2 x2	D3 x1	C8 x2
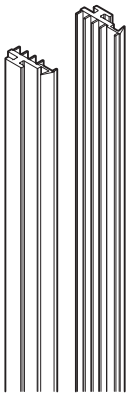	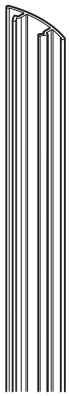	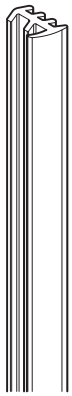	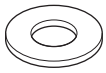
			4,3x9

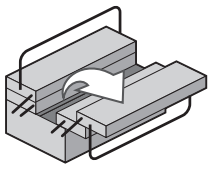

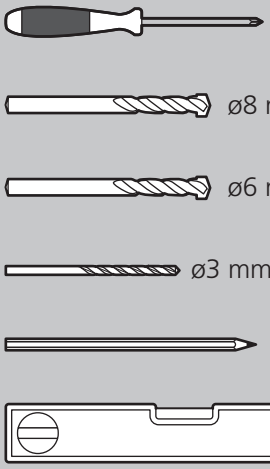

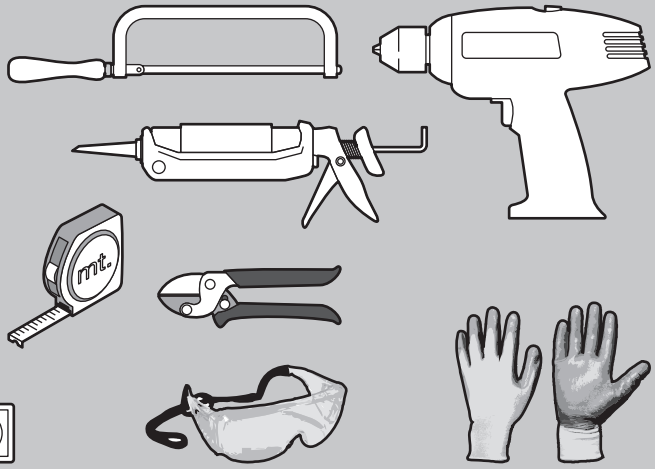

1 H

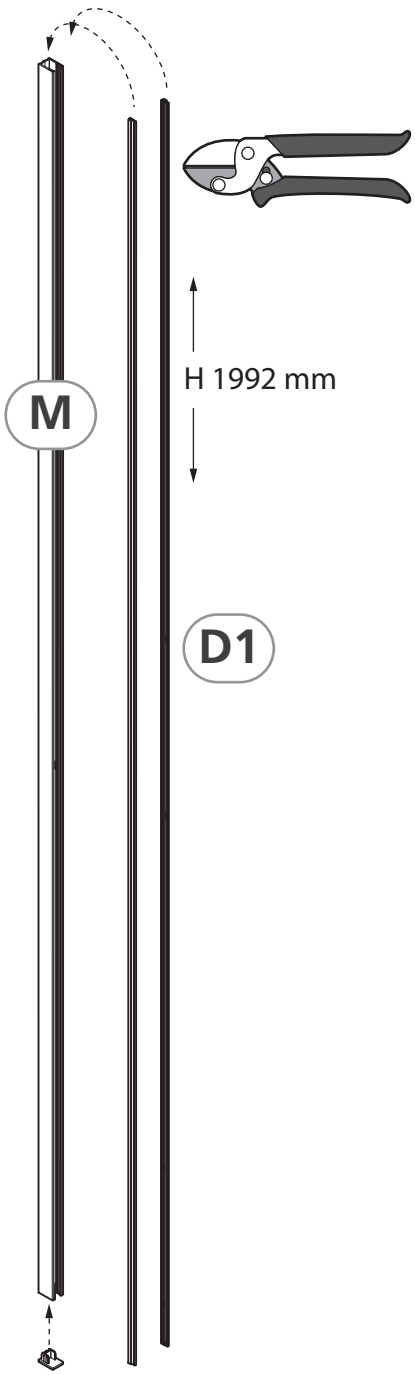

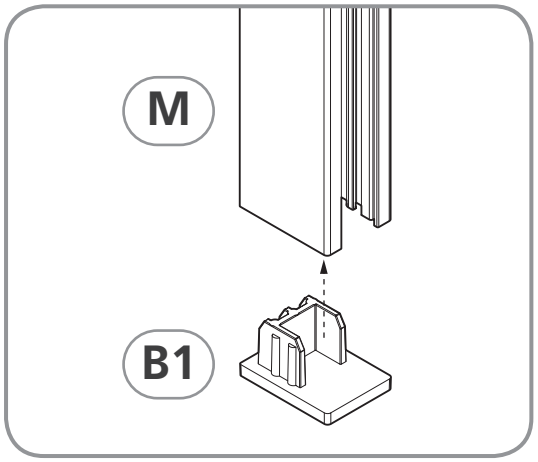

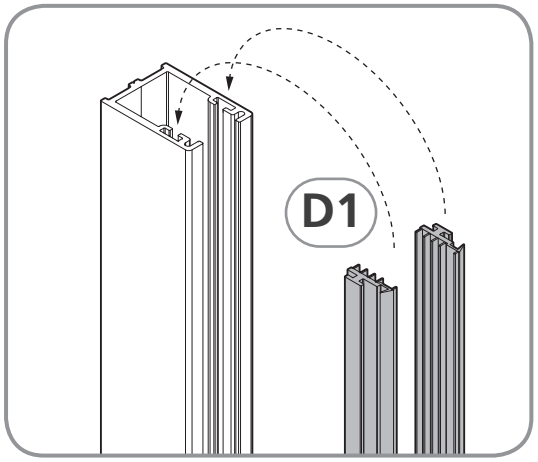

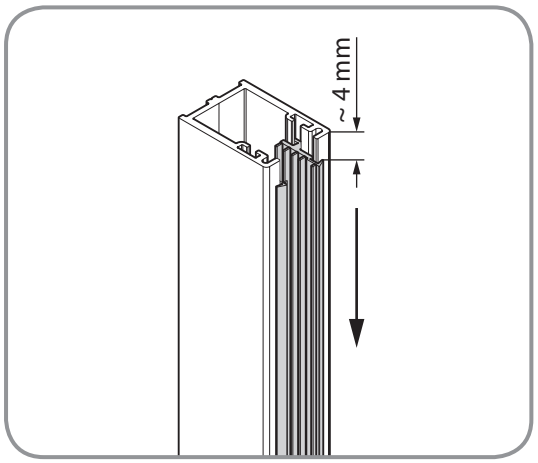

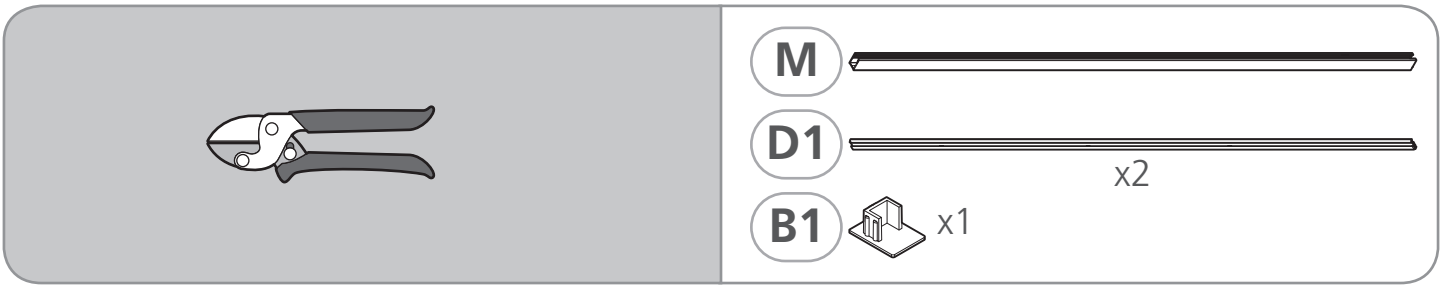

H

2

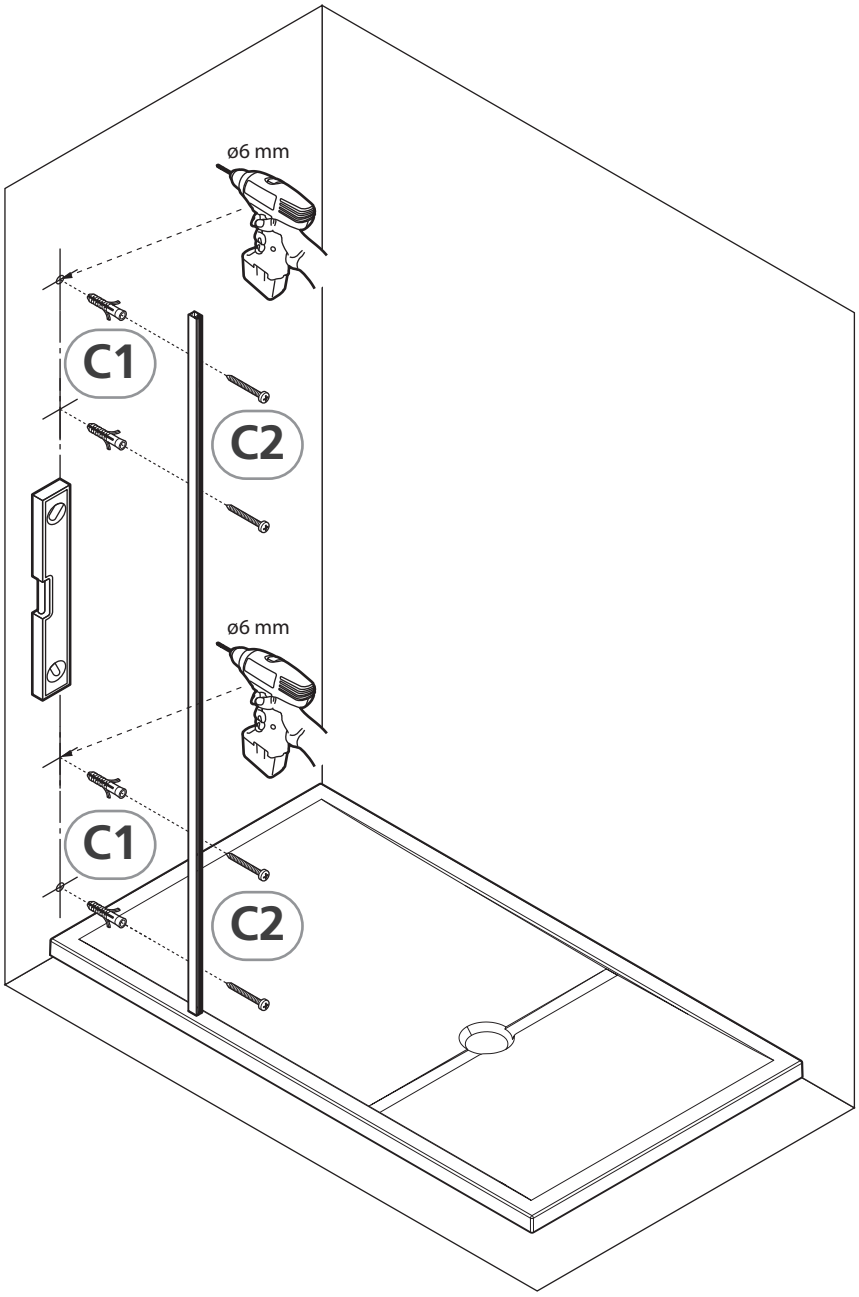

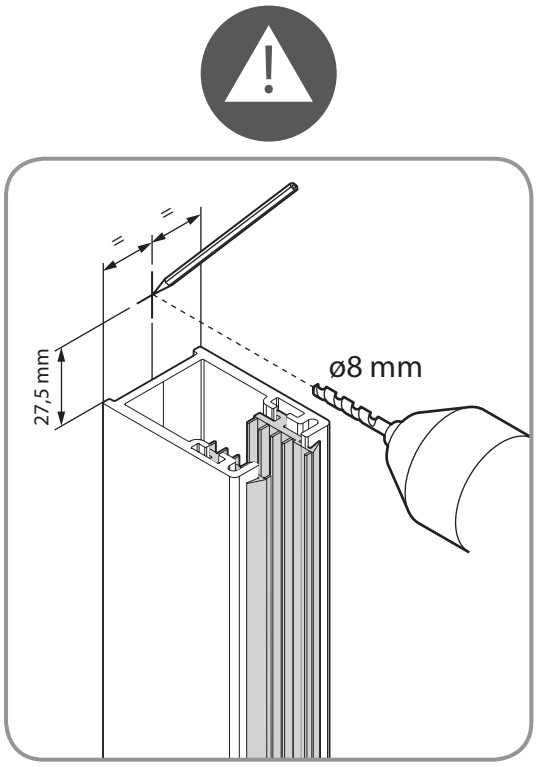

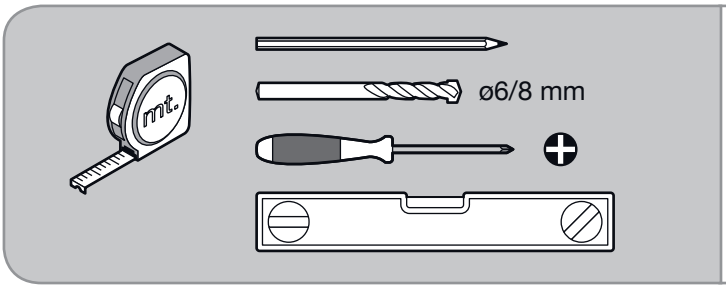

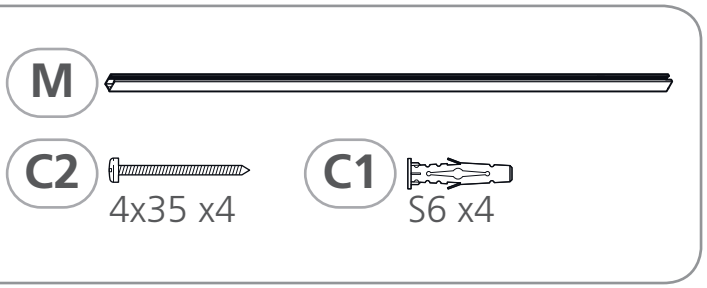

3 H

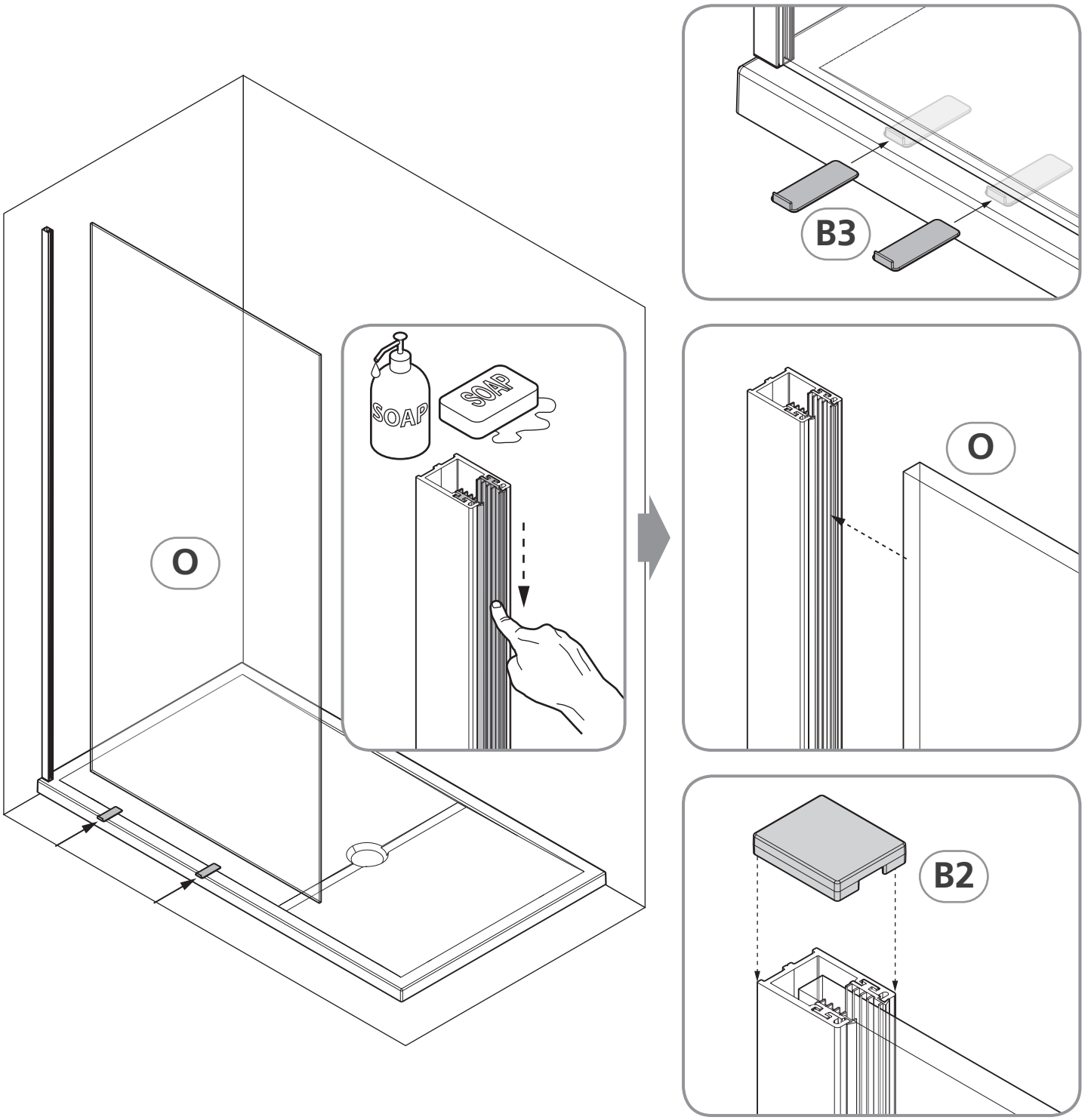

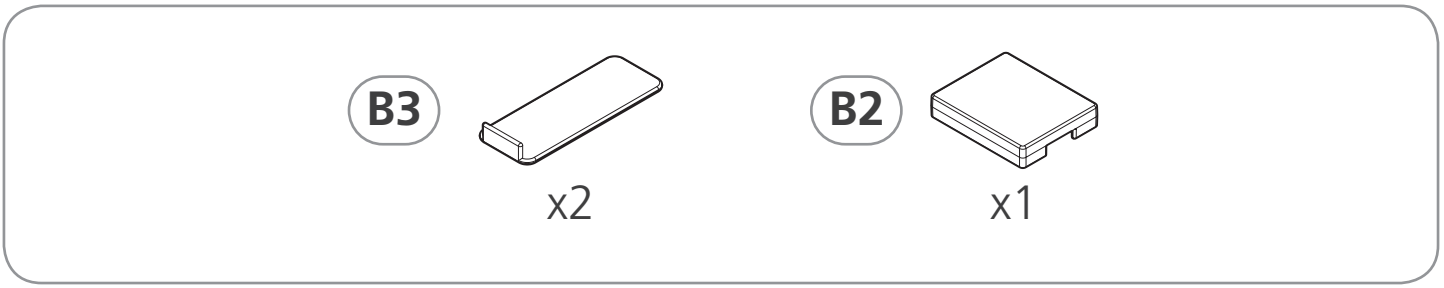

H

4

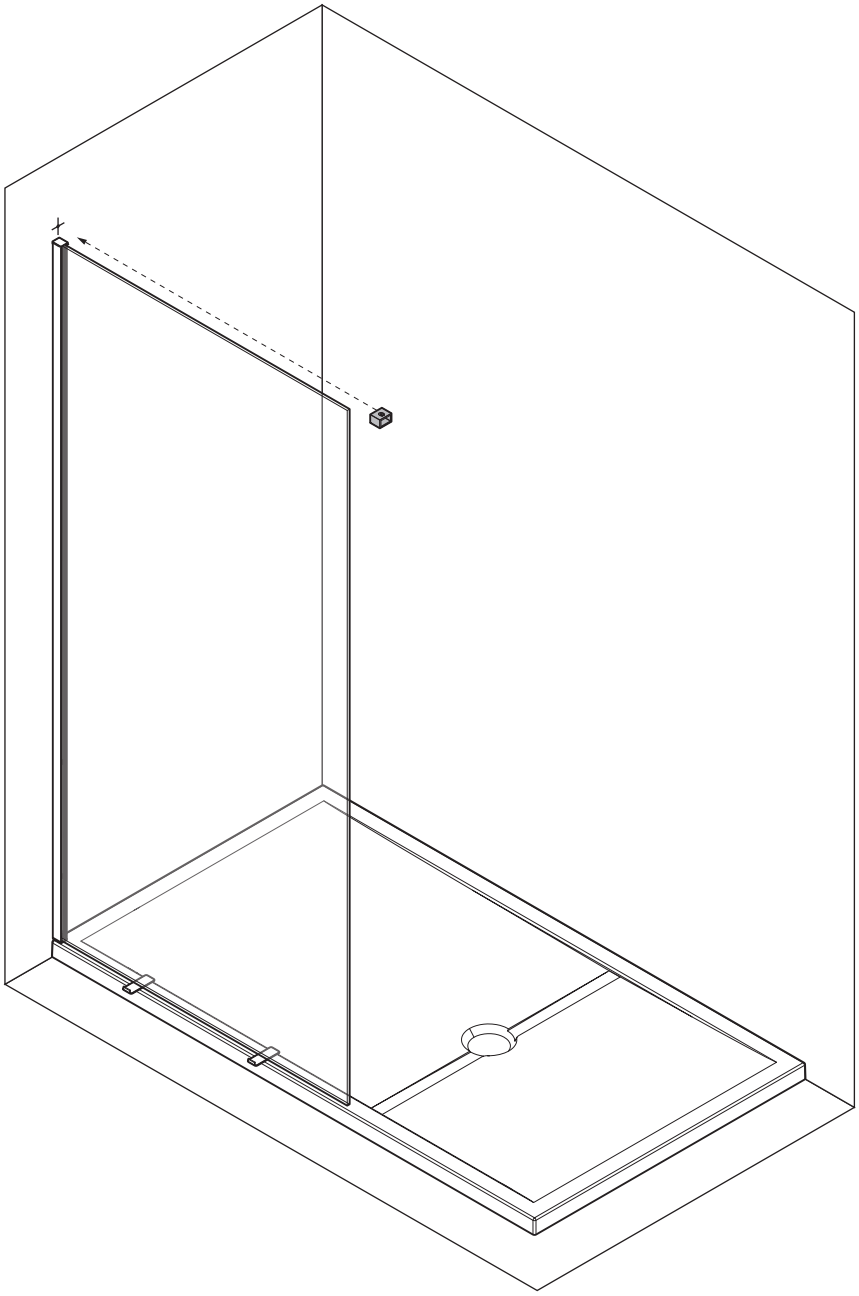

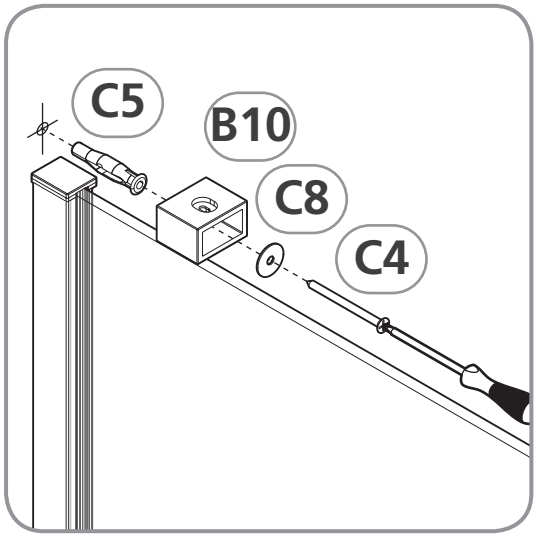

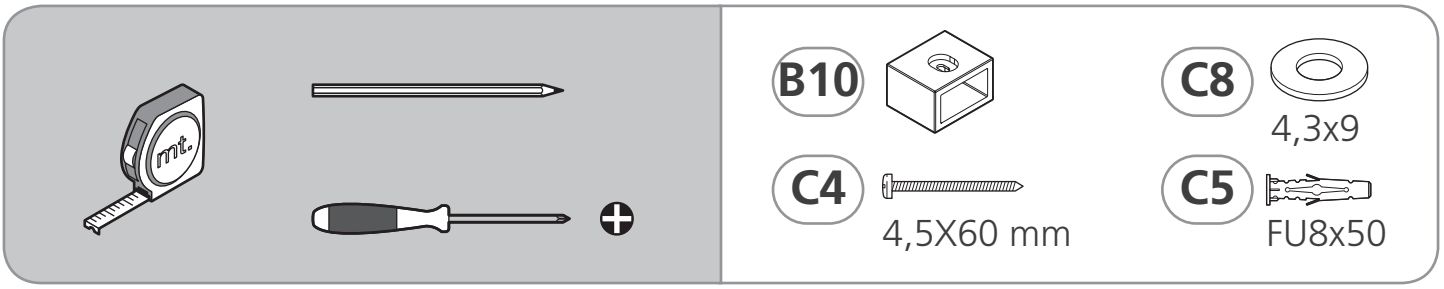

5 H

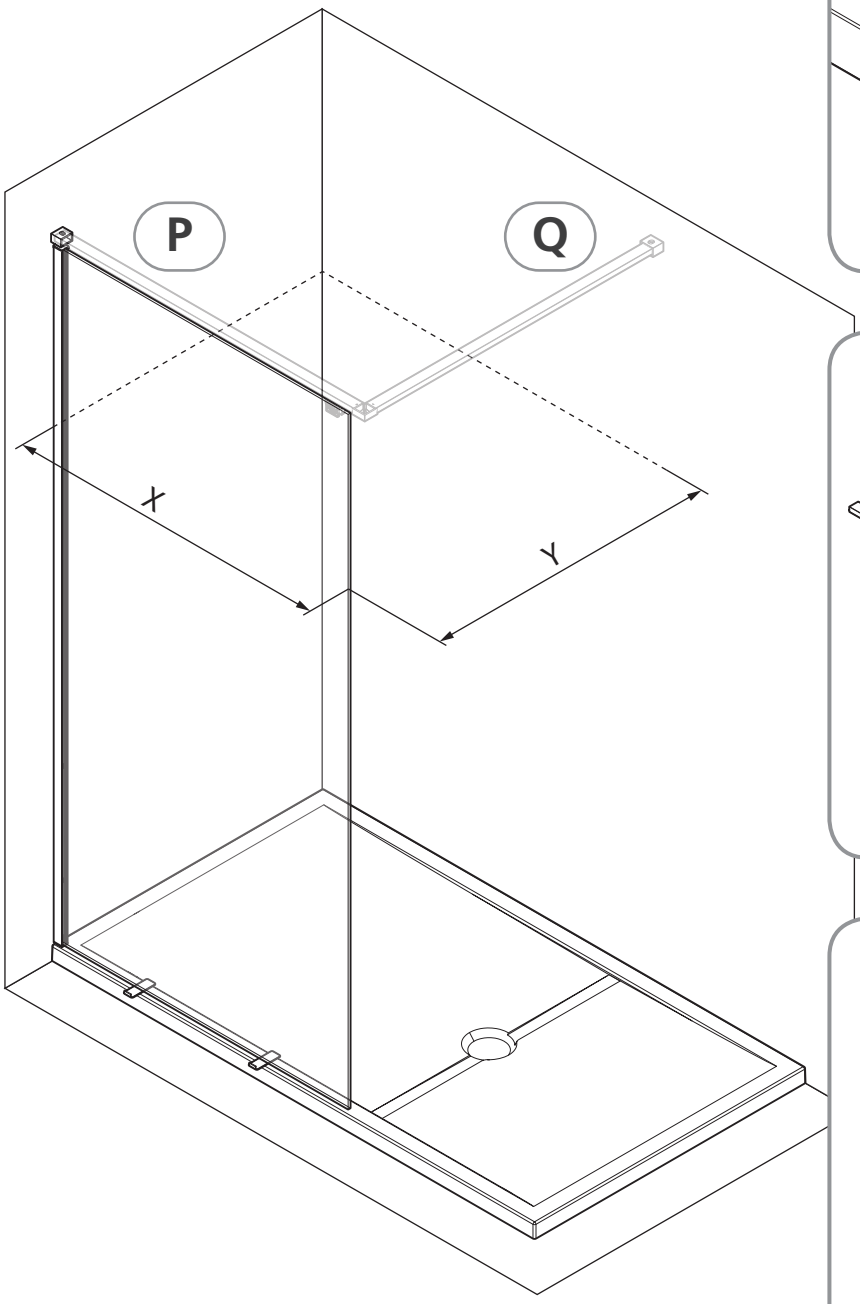

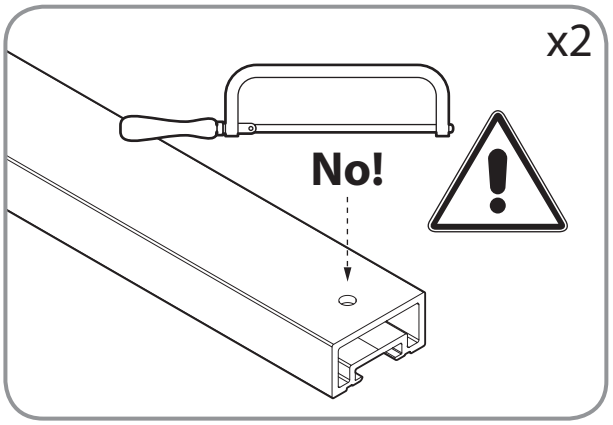

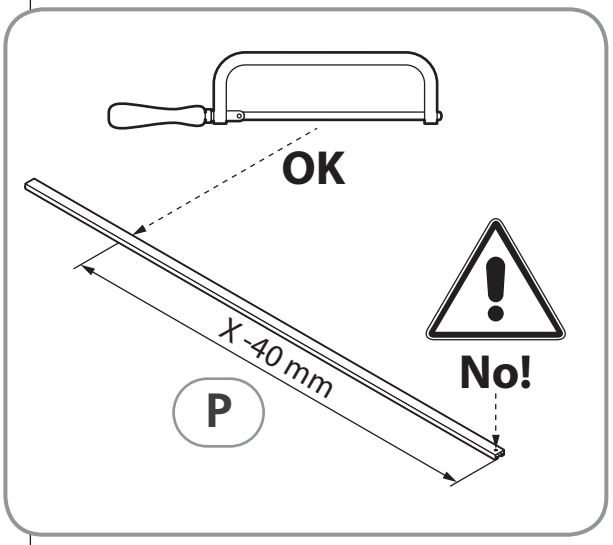

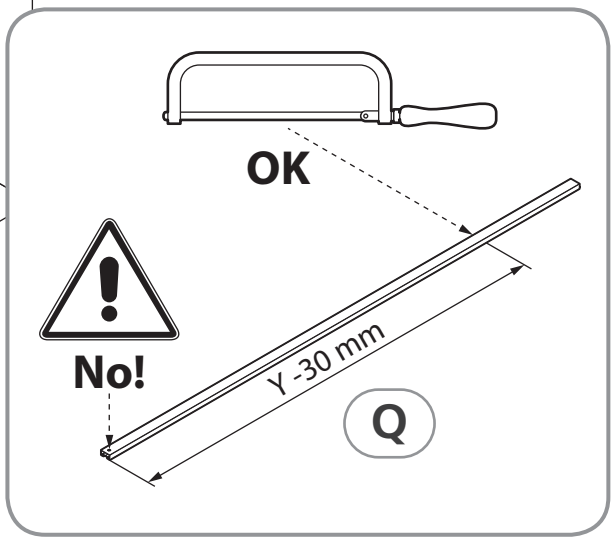

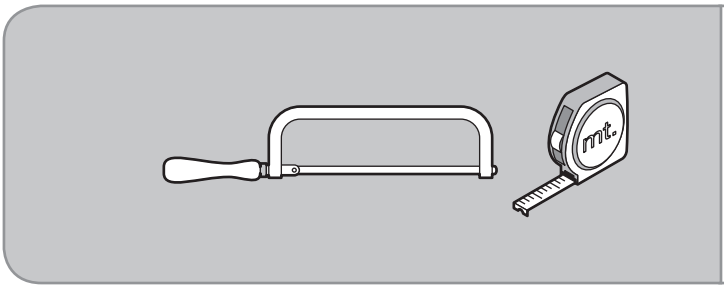

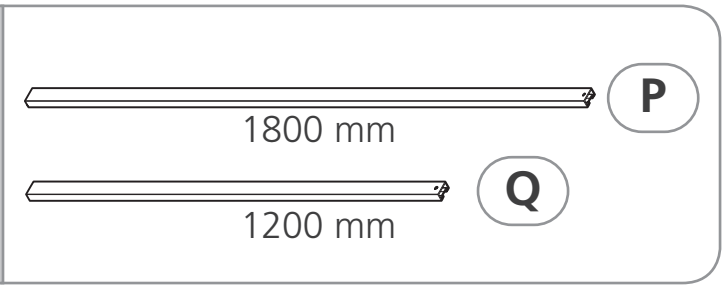

H

6

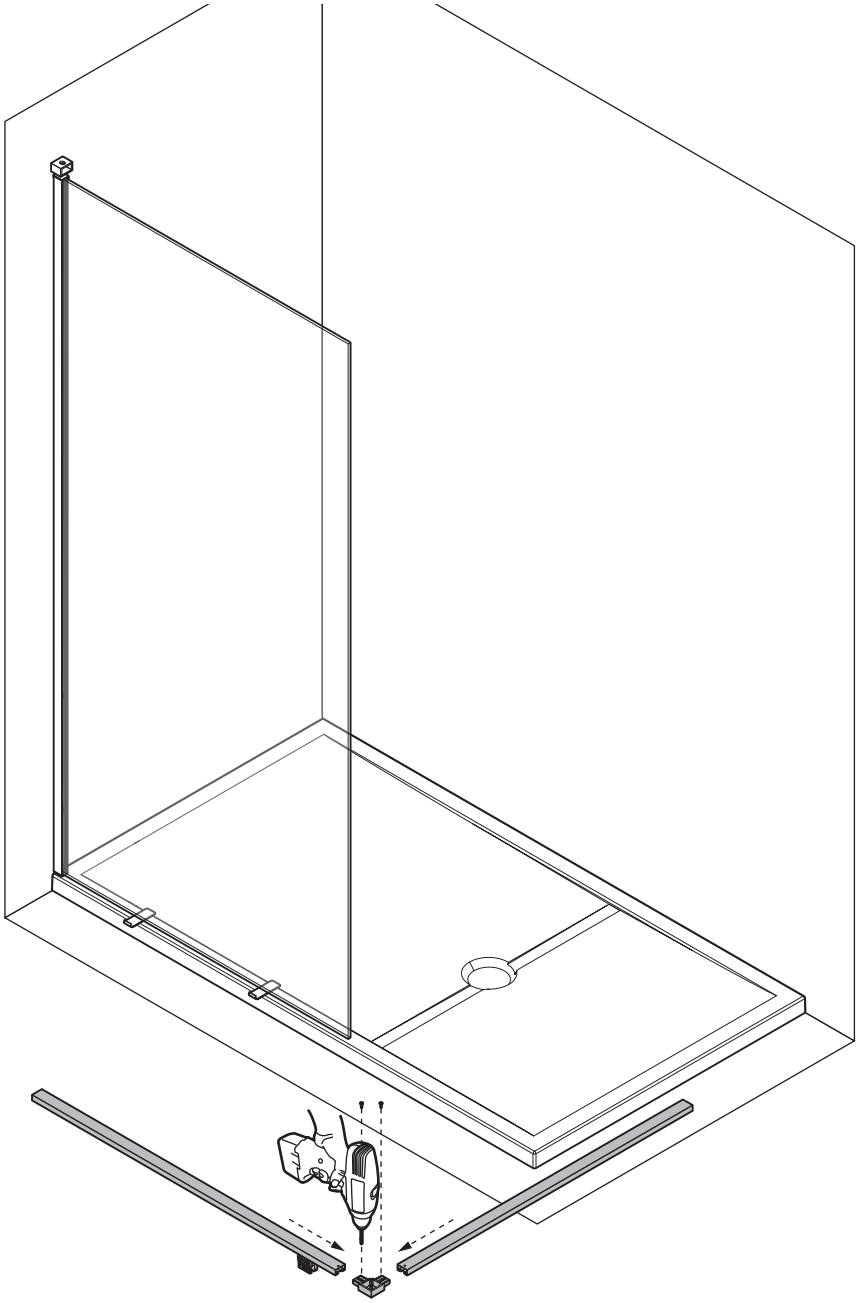

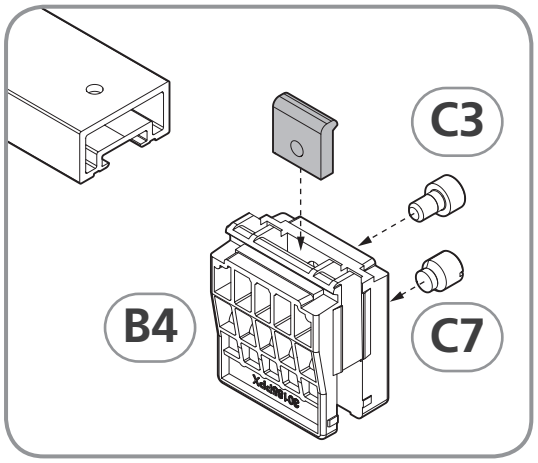

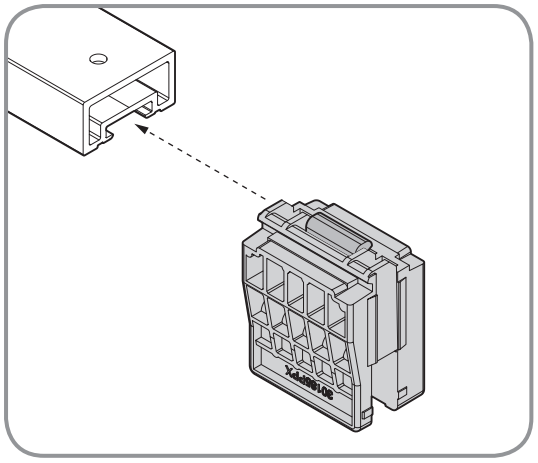

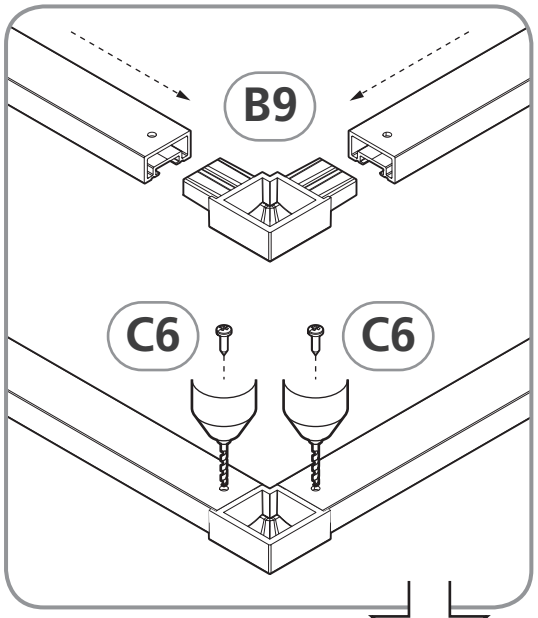

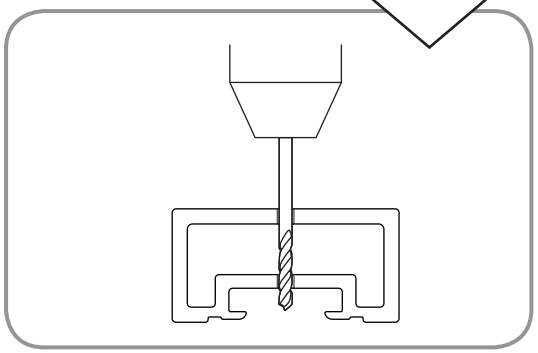

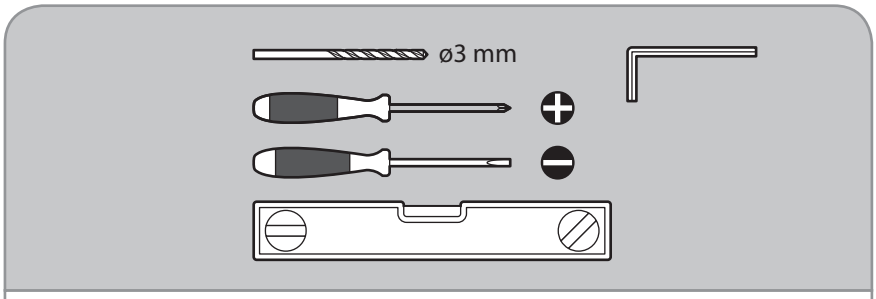

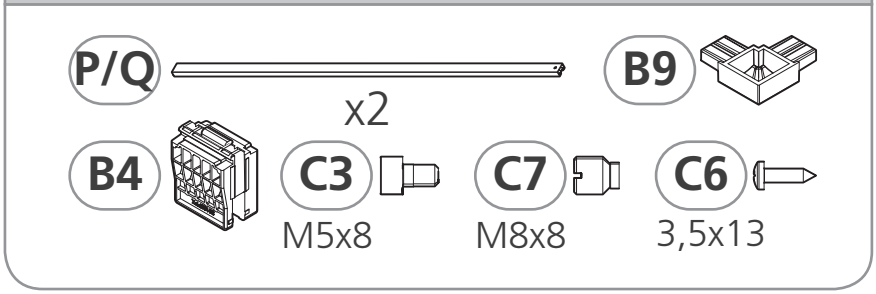

7 H

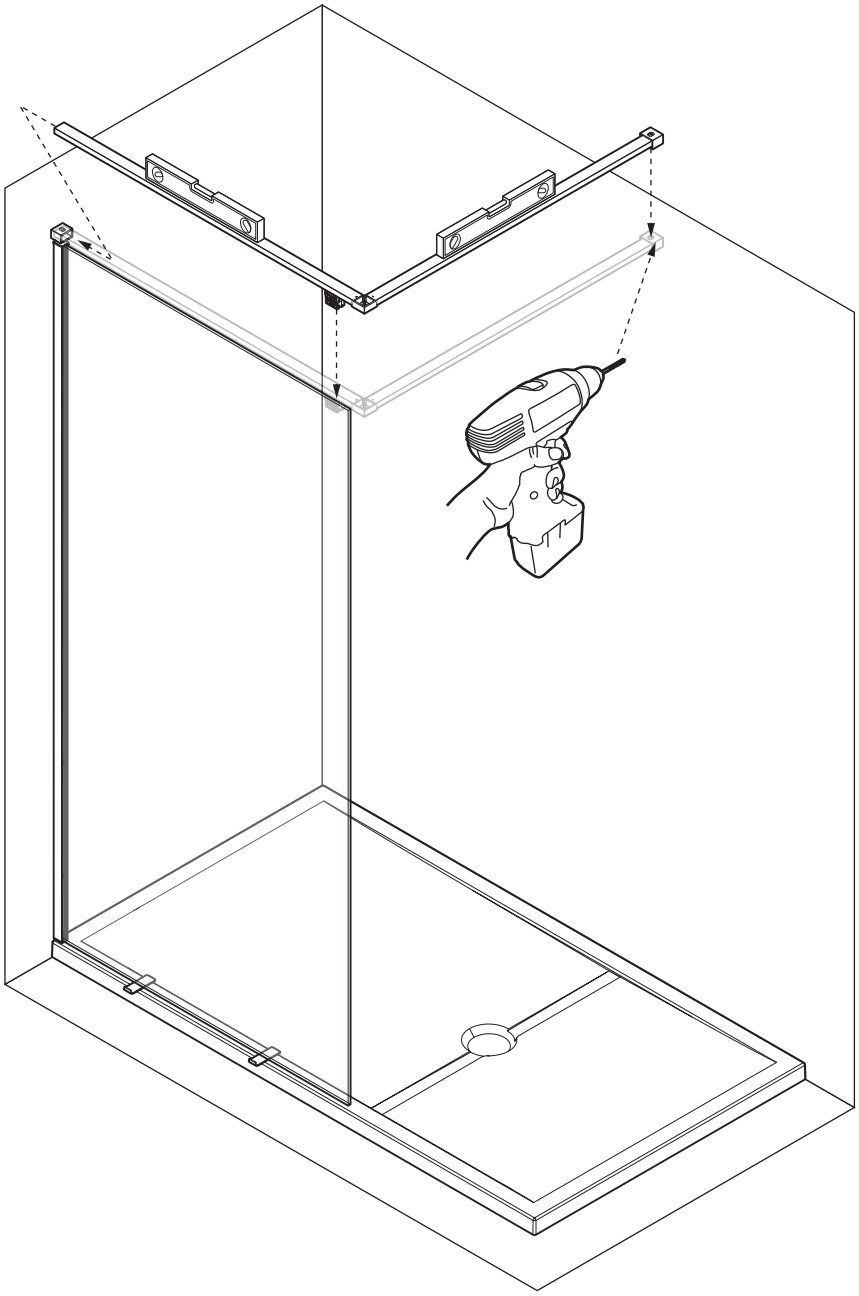

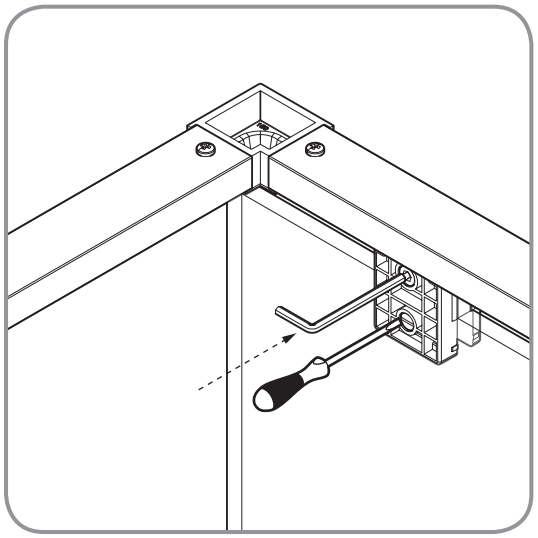

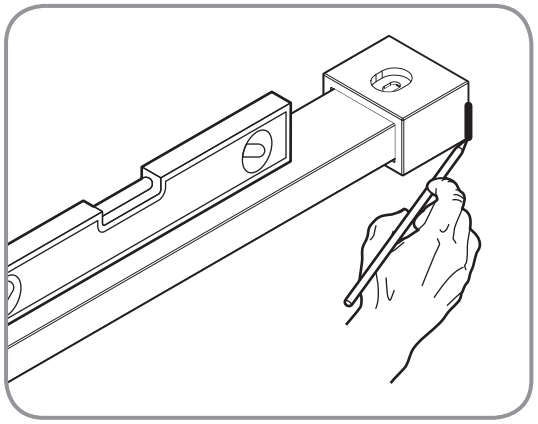

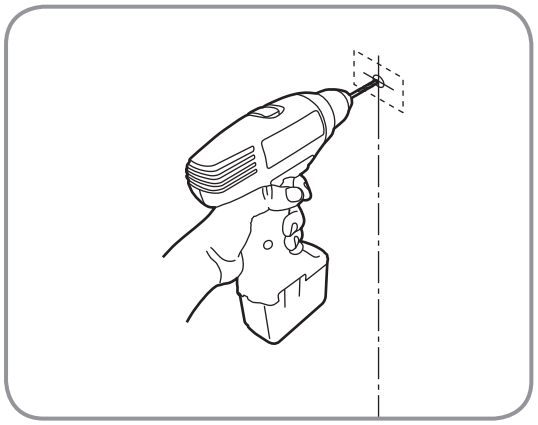

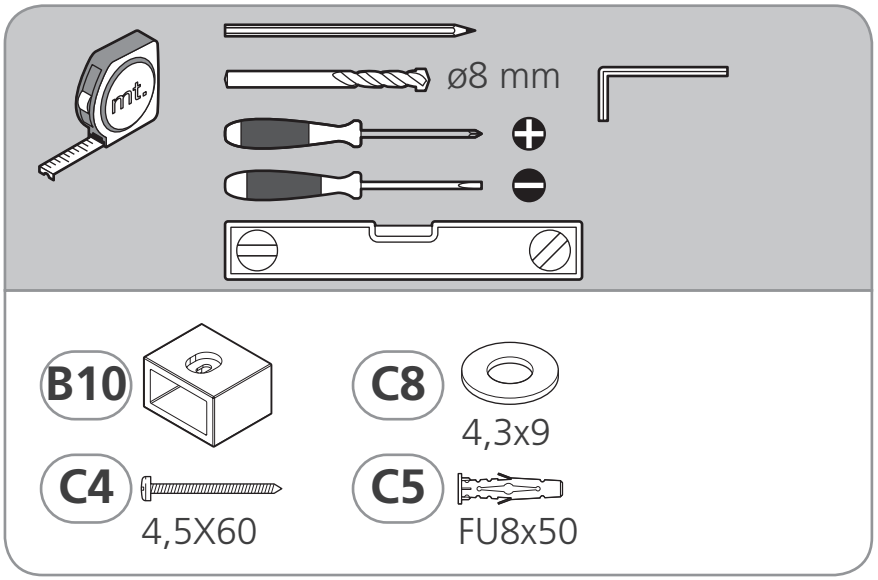

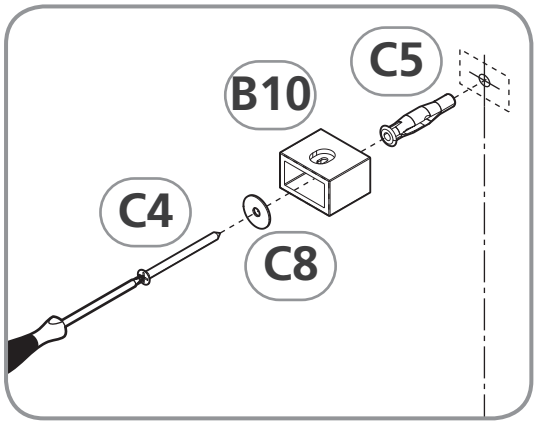

H

8

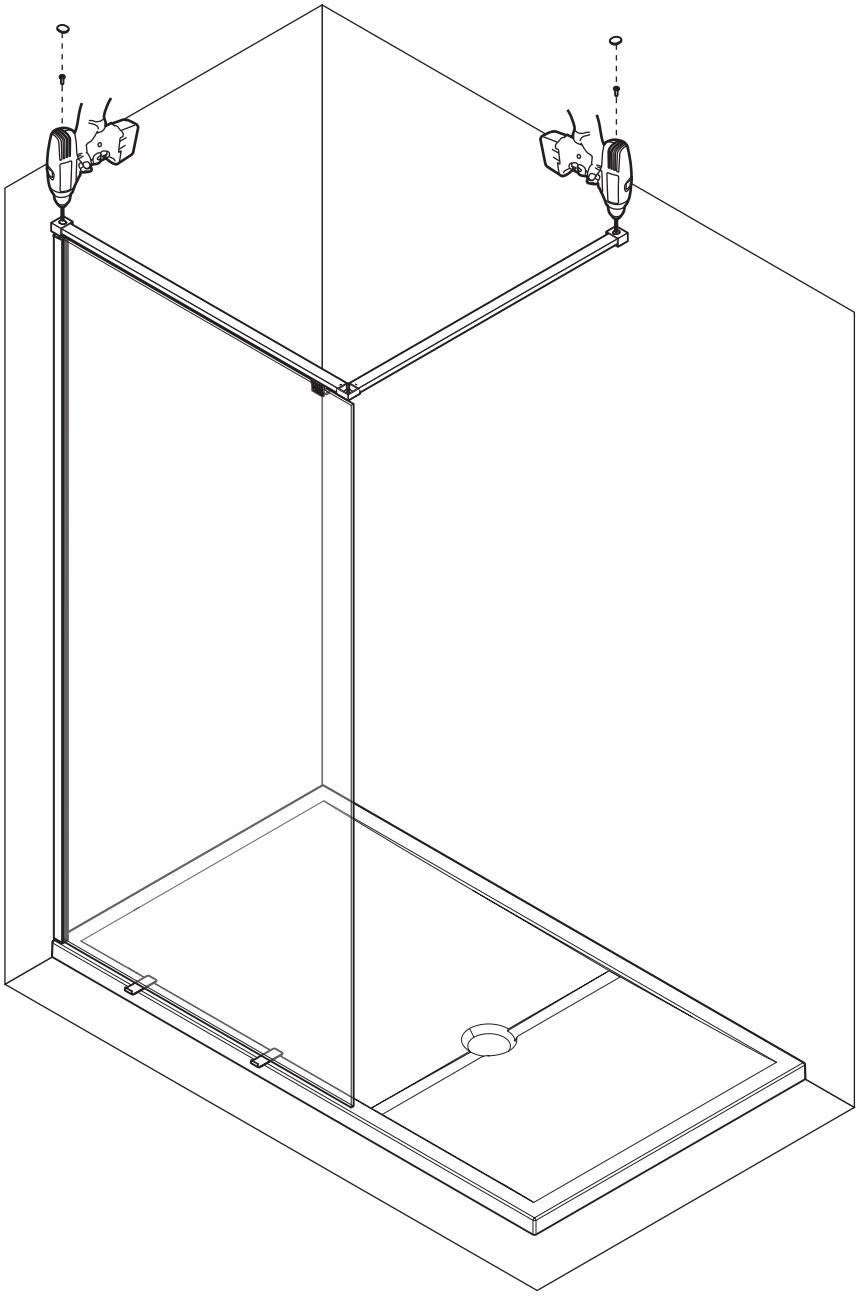

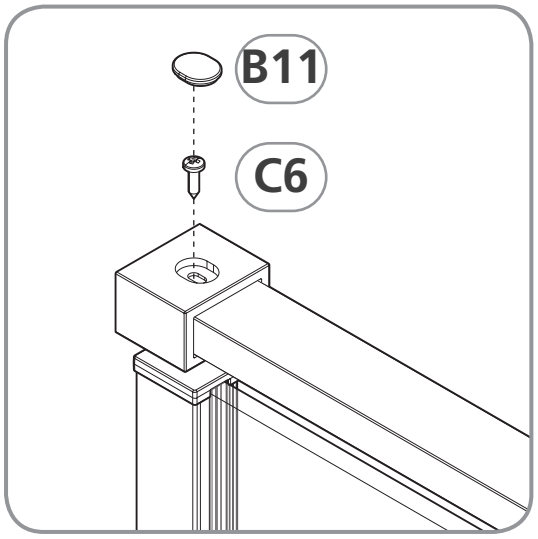

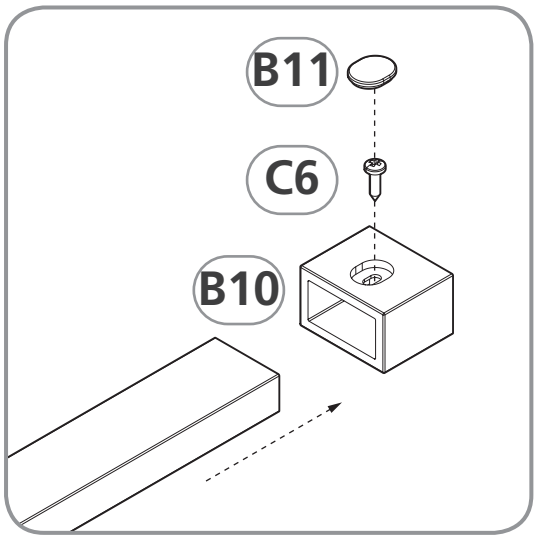

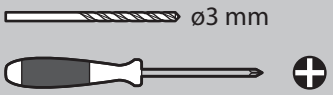

9 H

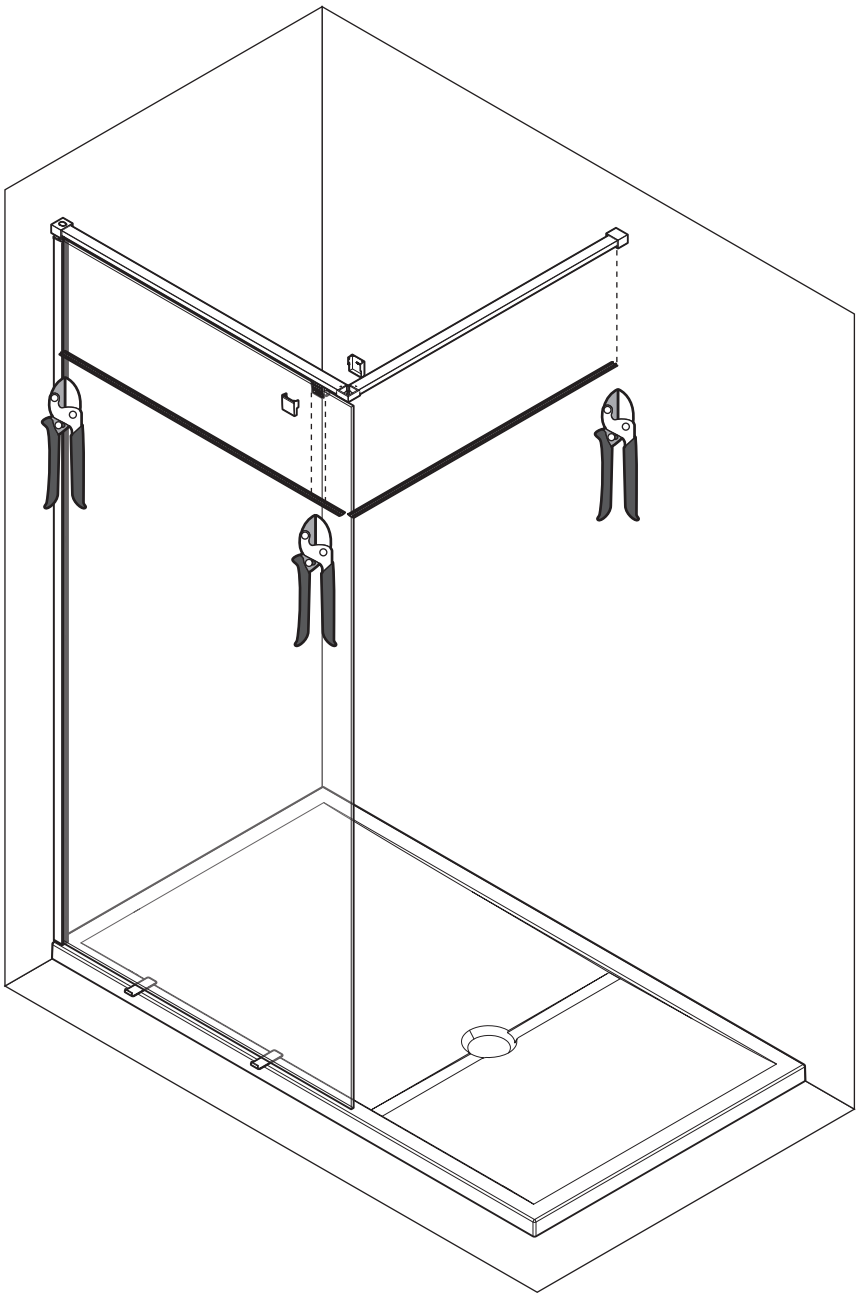

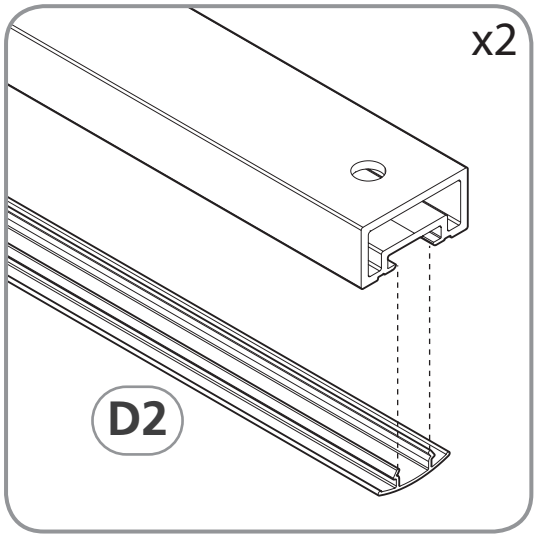

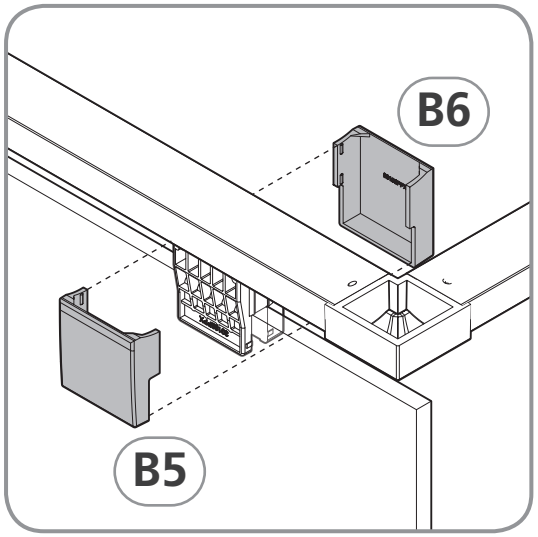

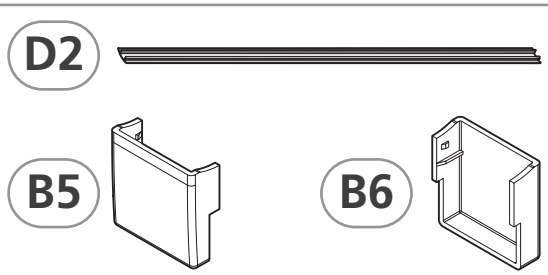

H

10

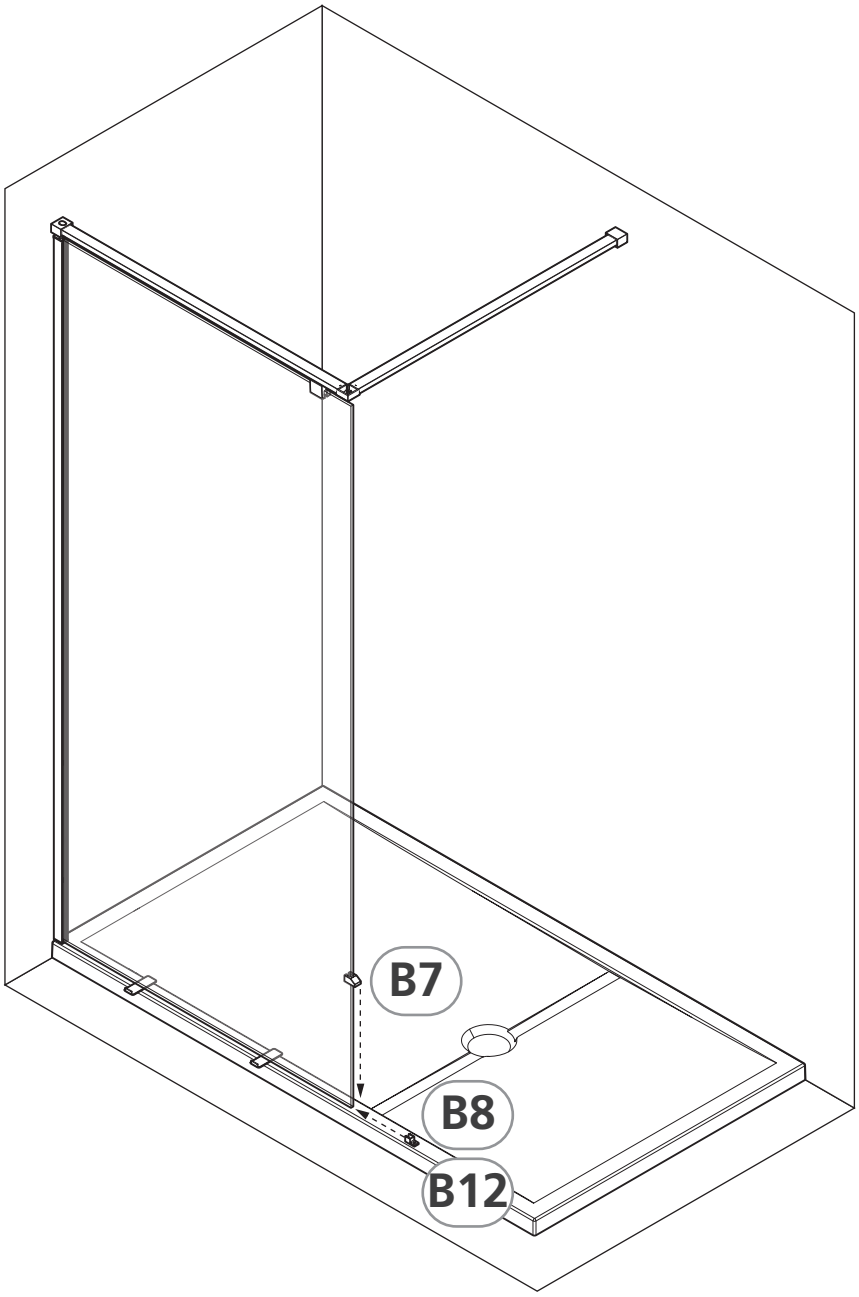

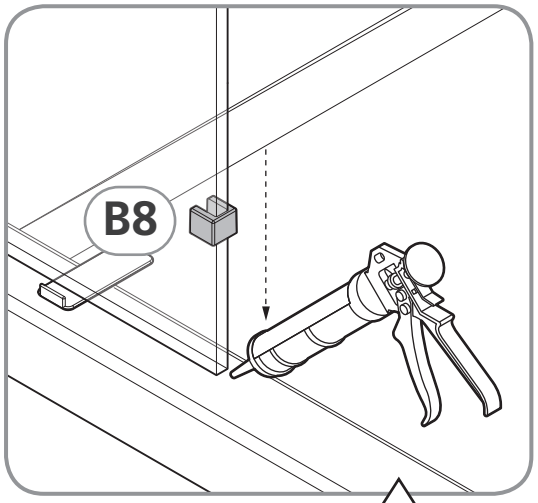

Ceramic

=

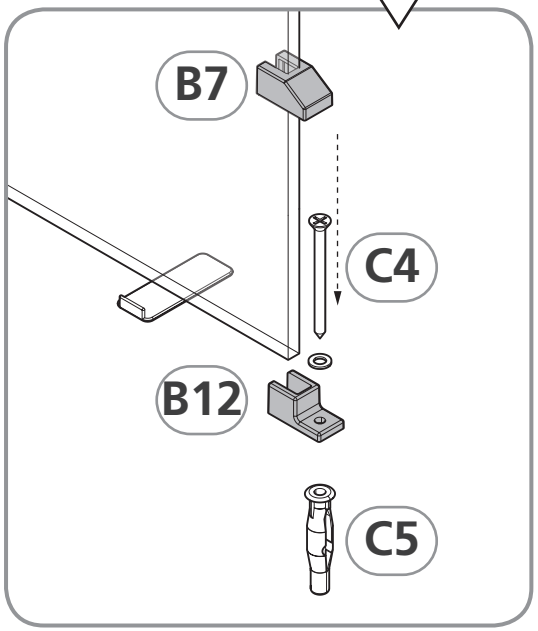

Concrete

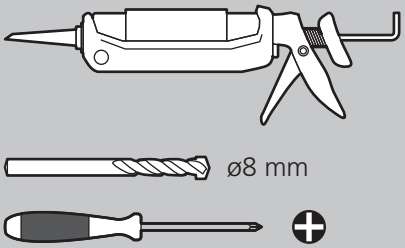

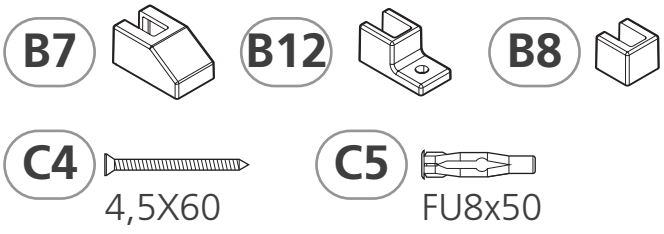

11 H

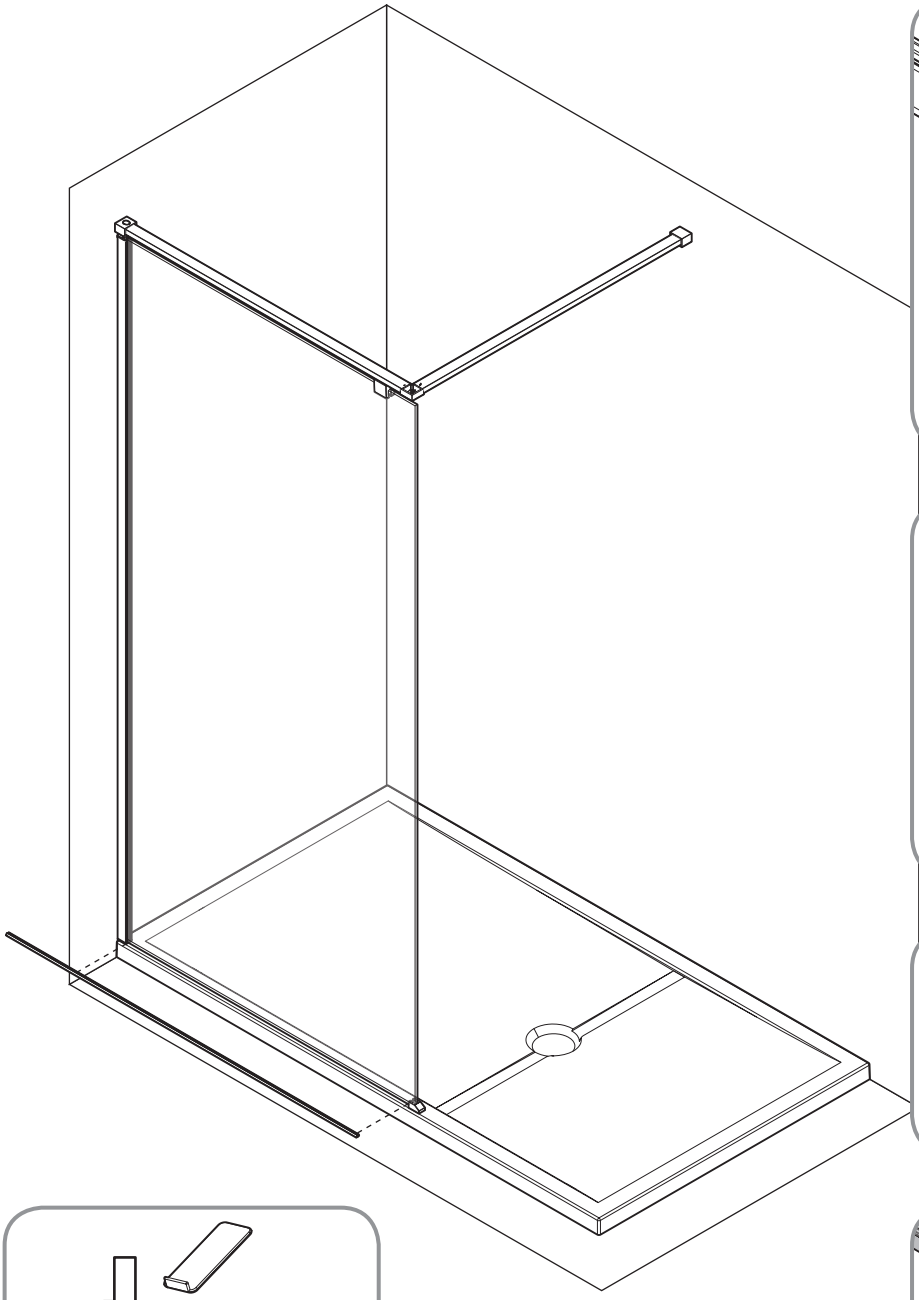

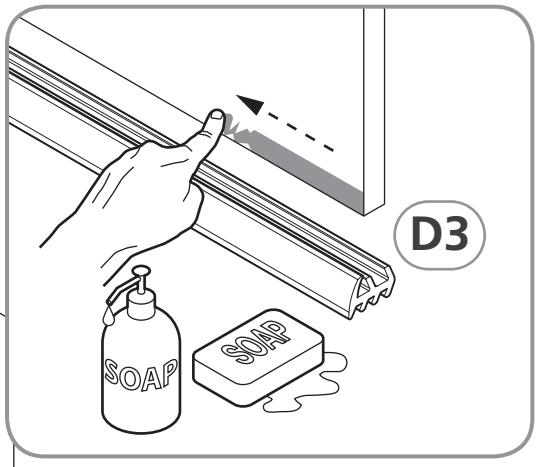

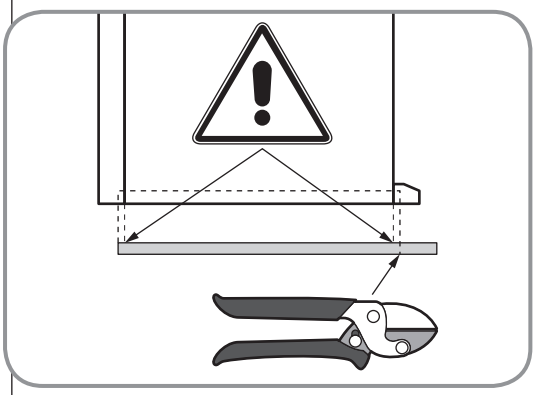

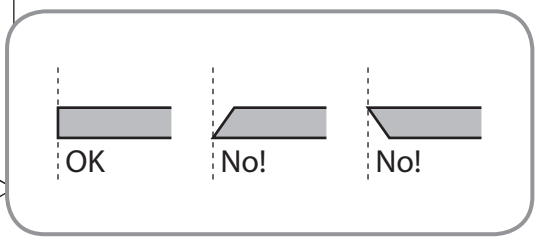

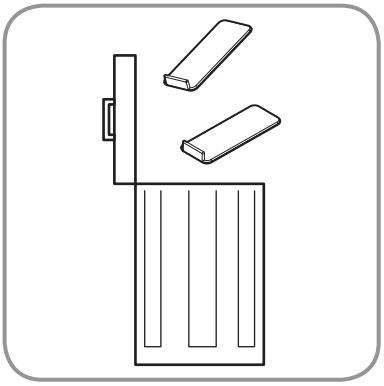

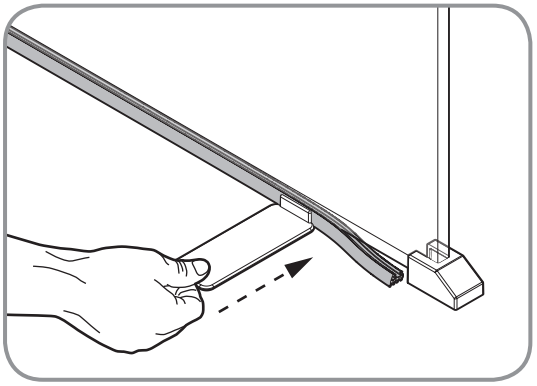

D3

H

12

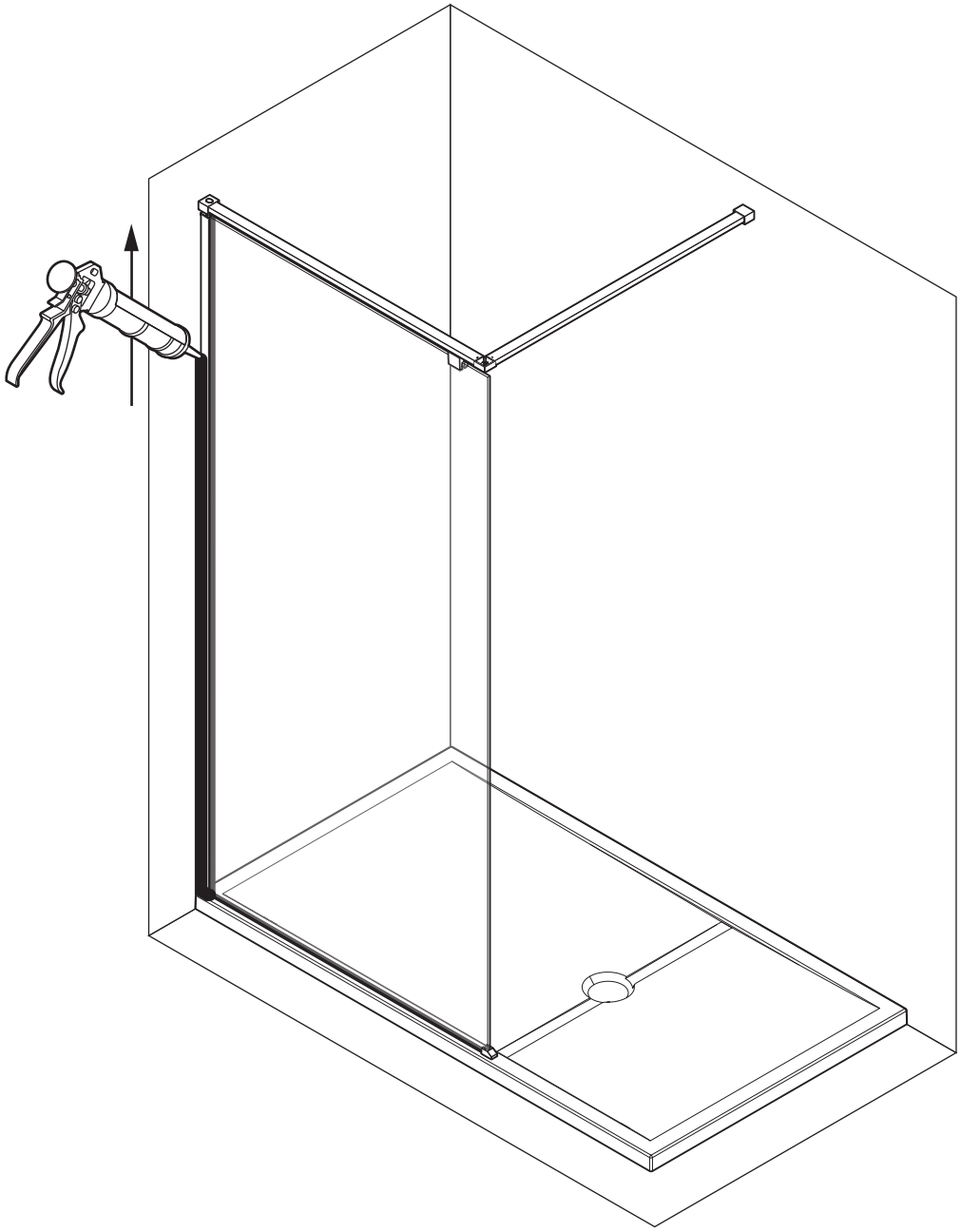

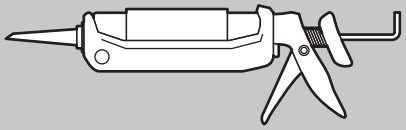

Eliseo HH

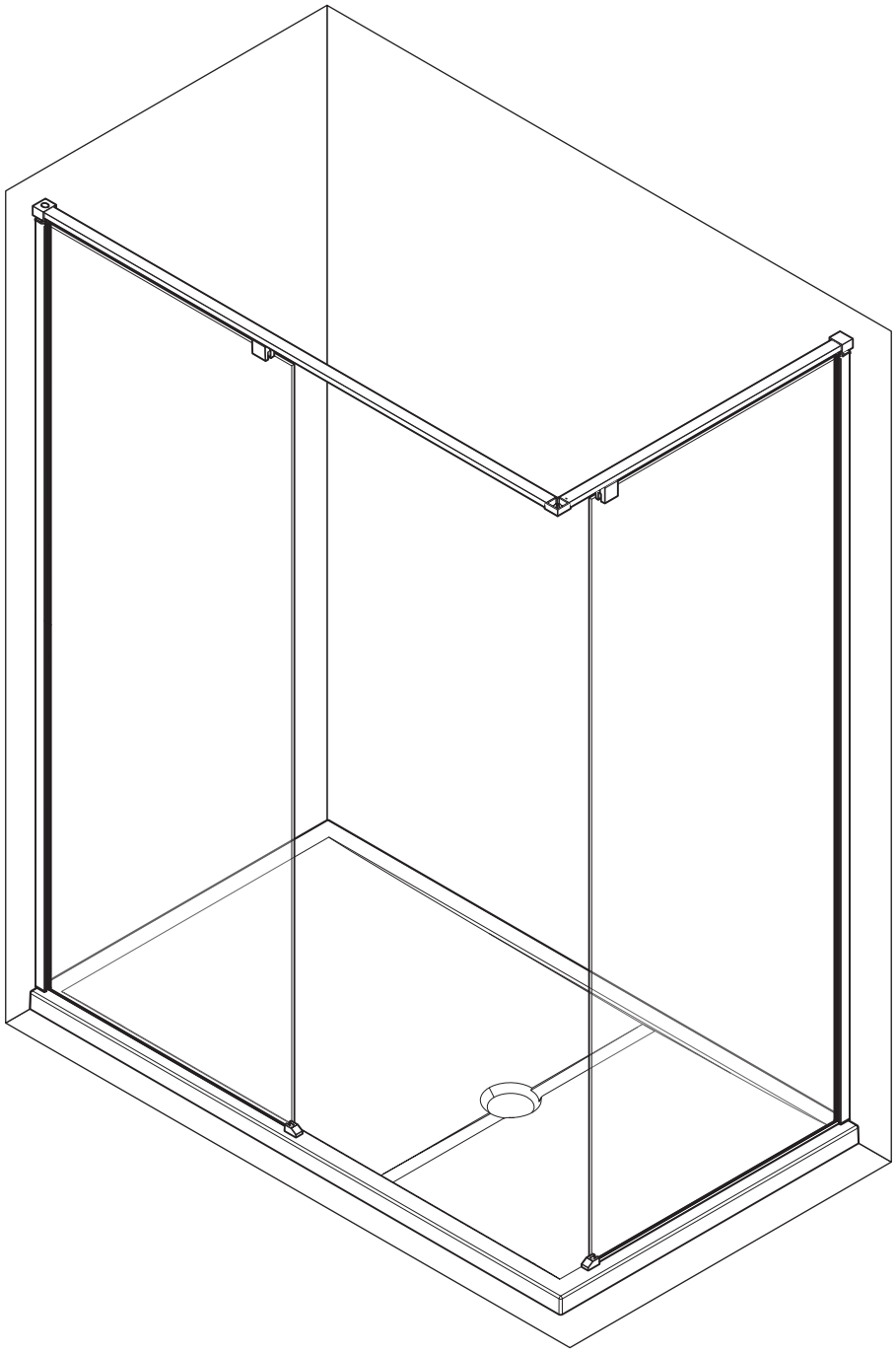

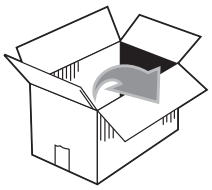

B1 x2	B2 x2	B3 x4	B4 x2	B5 x2	B6 x2
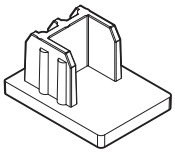	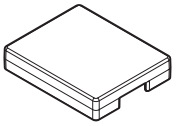	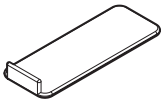	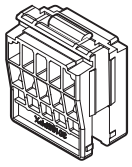	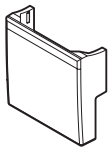	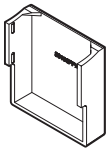

B7 x2	B8 x2	B9 x1	B10 x2	B11 x2	B12 x2
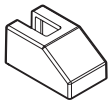		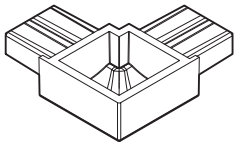	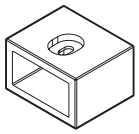		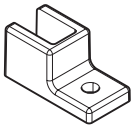

C1 x8	C2 x8	C3 x2	C4 x4	C5 x4	C6 x4	C7 x2
				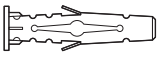		
S6	4x35	M5x8	4,5x60	FU8x50	3,5x13	M8x8

D1 x2	D2 x2	D3 x2	C8 x2
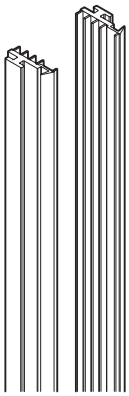	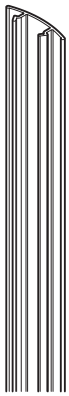	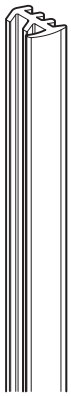	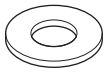
			4,3x9

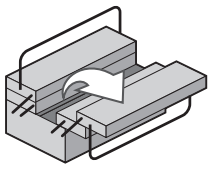

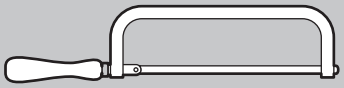

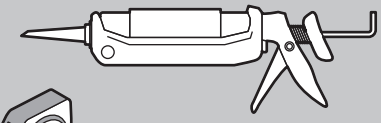

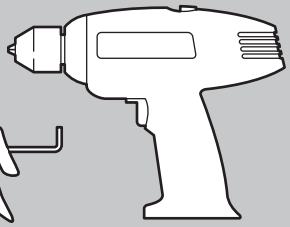

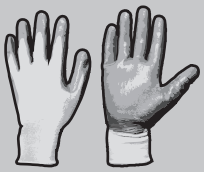

1 x2 kit 1 - kit 3 HH

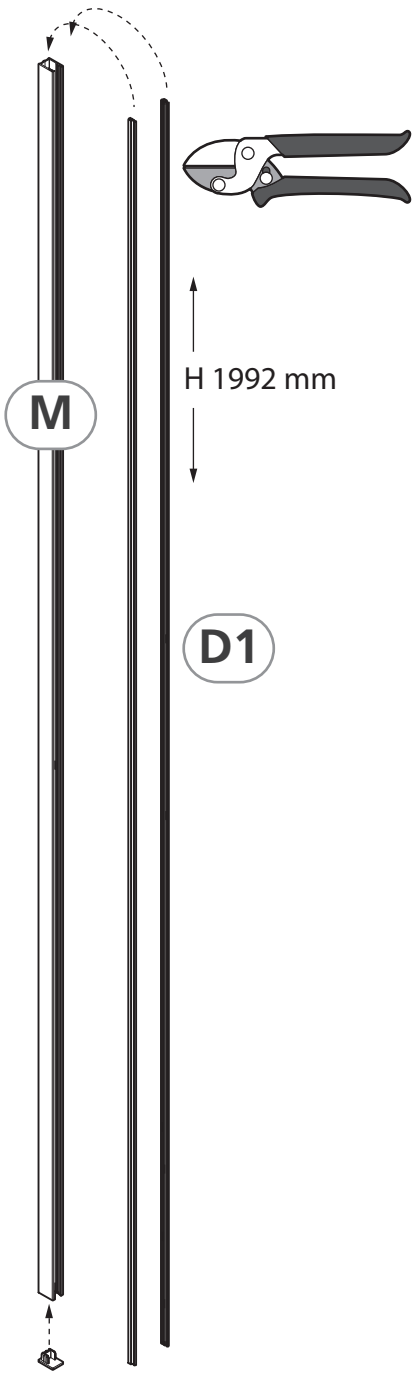

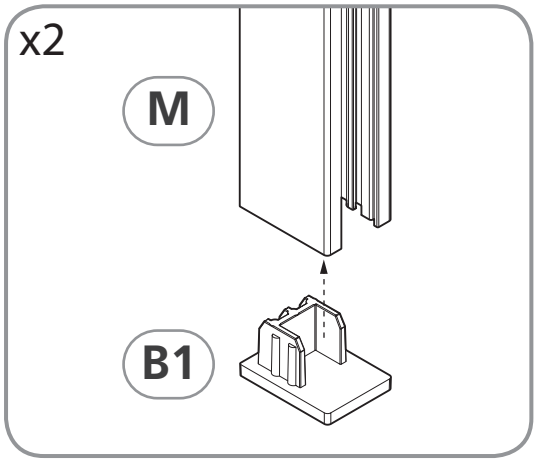

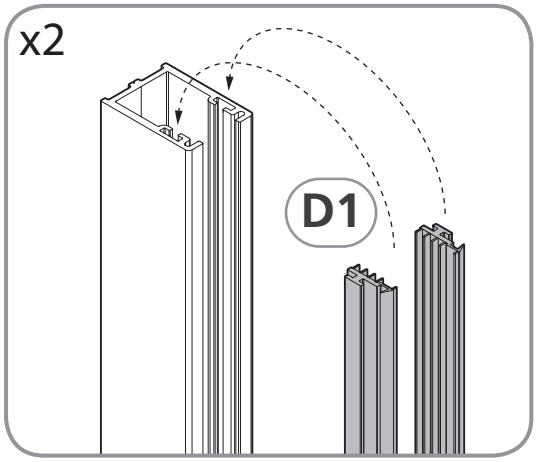

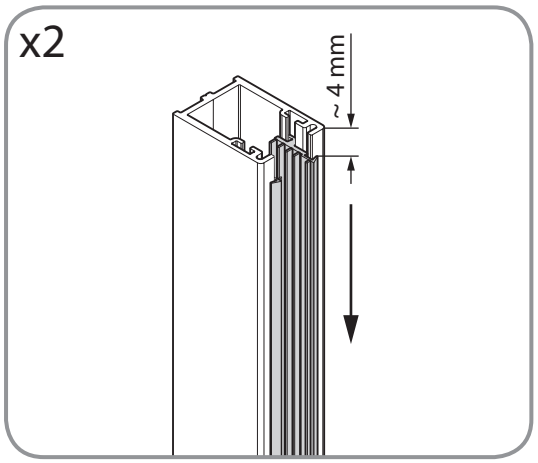

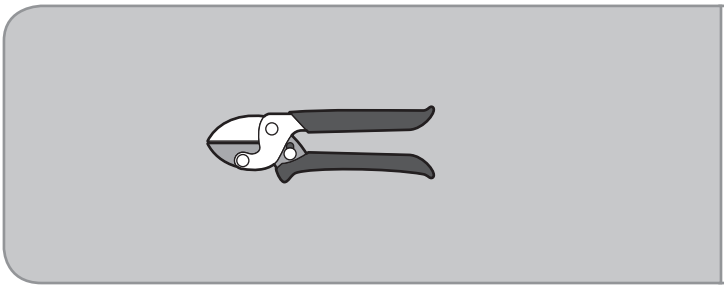

HH kit 1 - kit 3 2

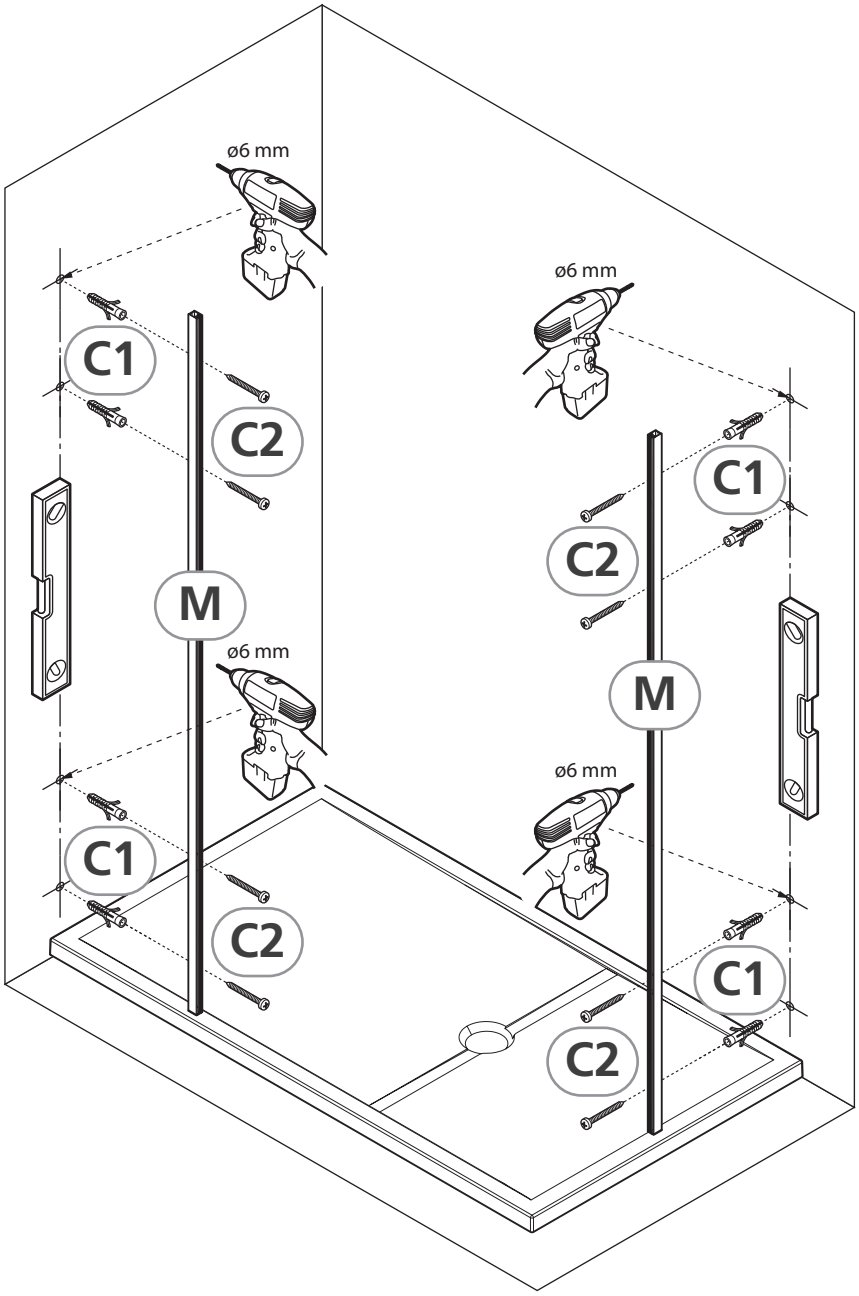

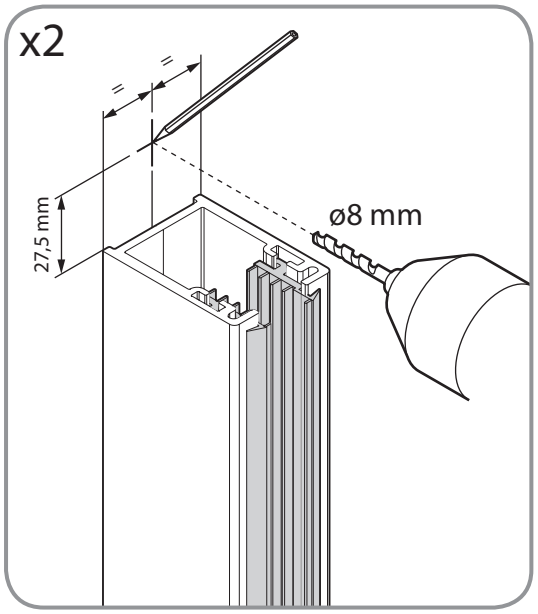

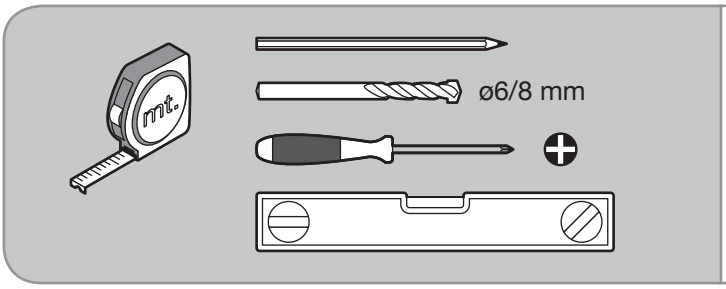

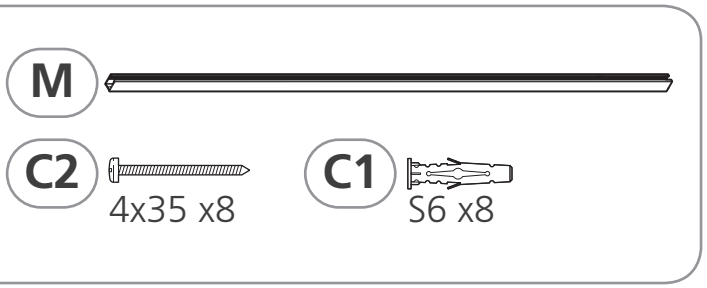

3 kit 1 - kit 3 HH

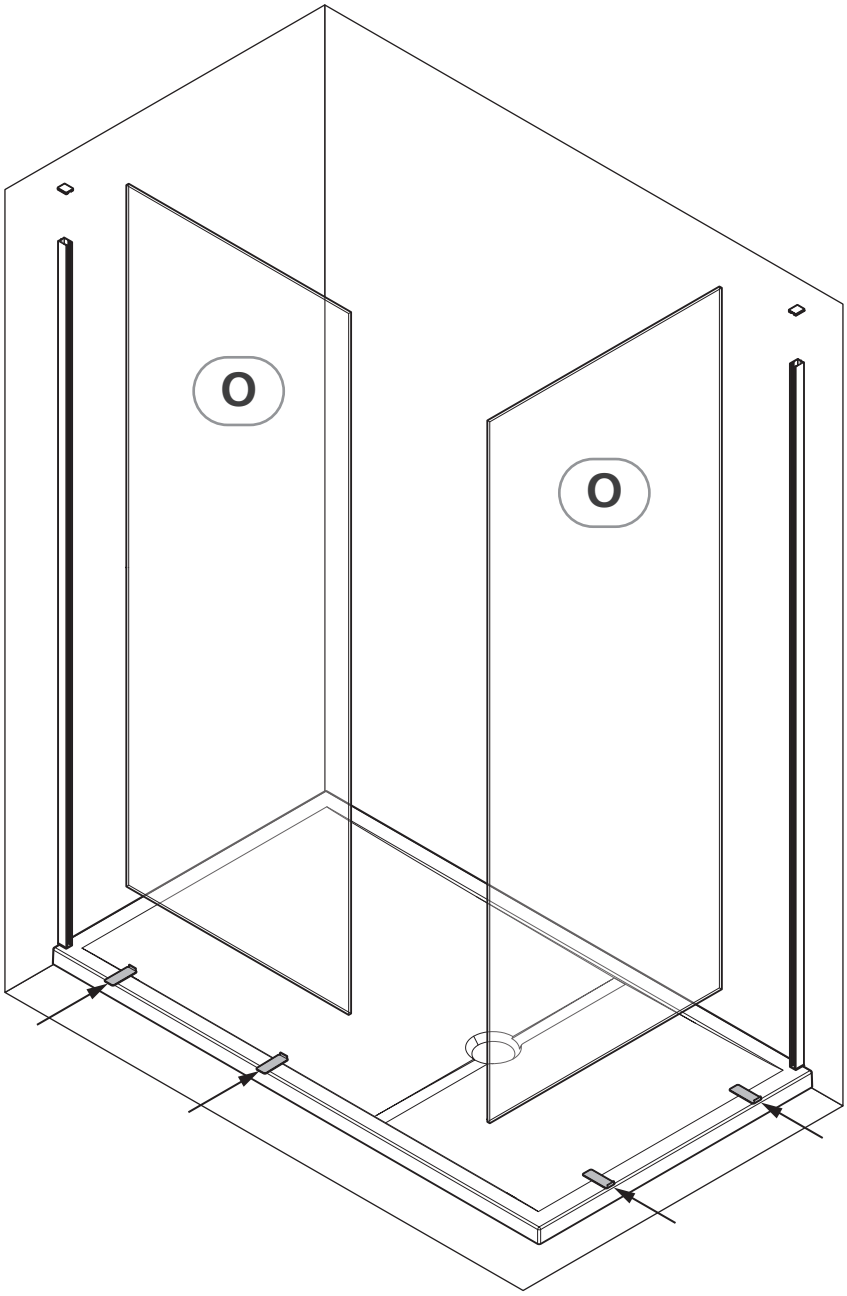

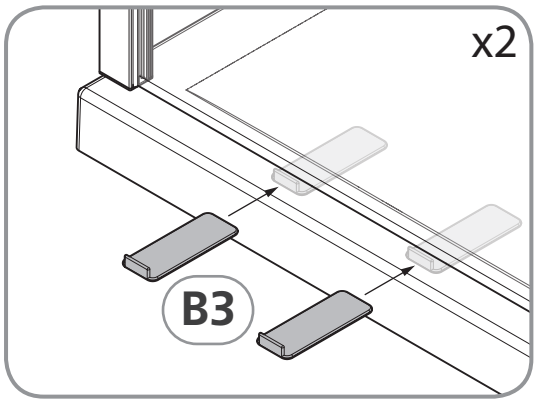

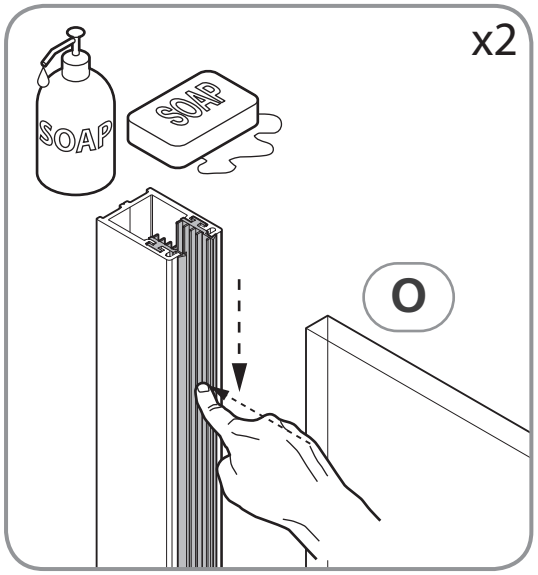

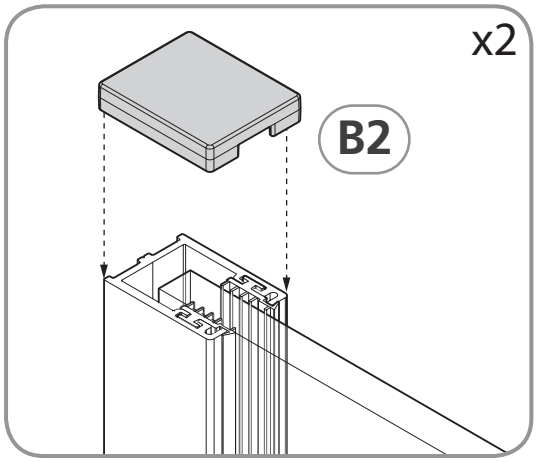

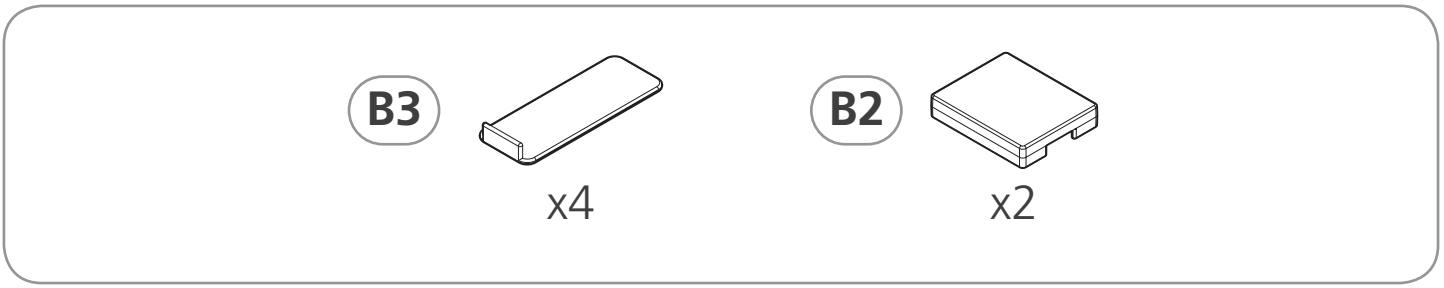

HH kit 1 - kit 3

4

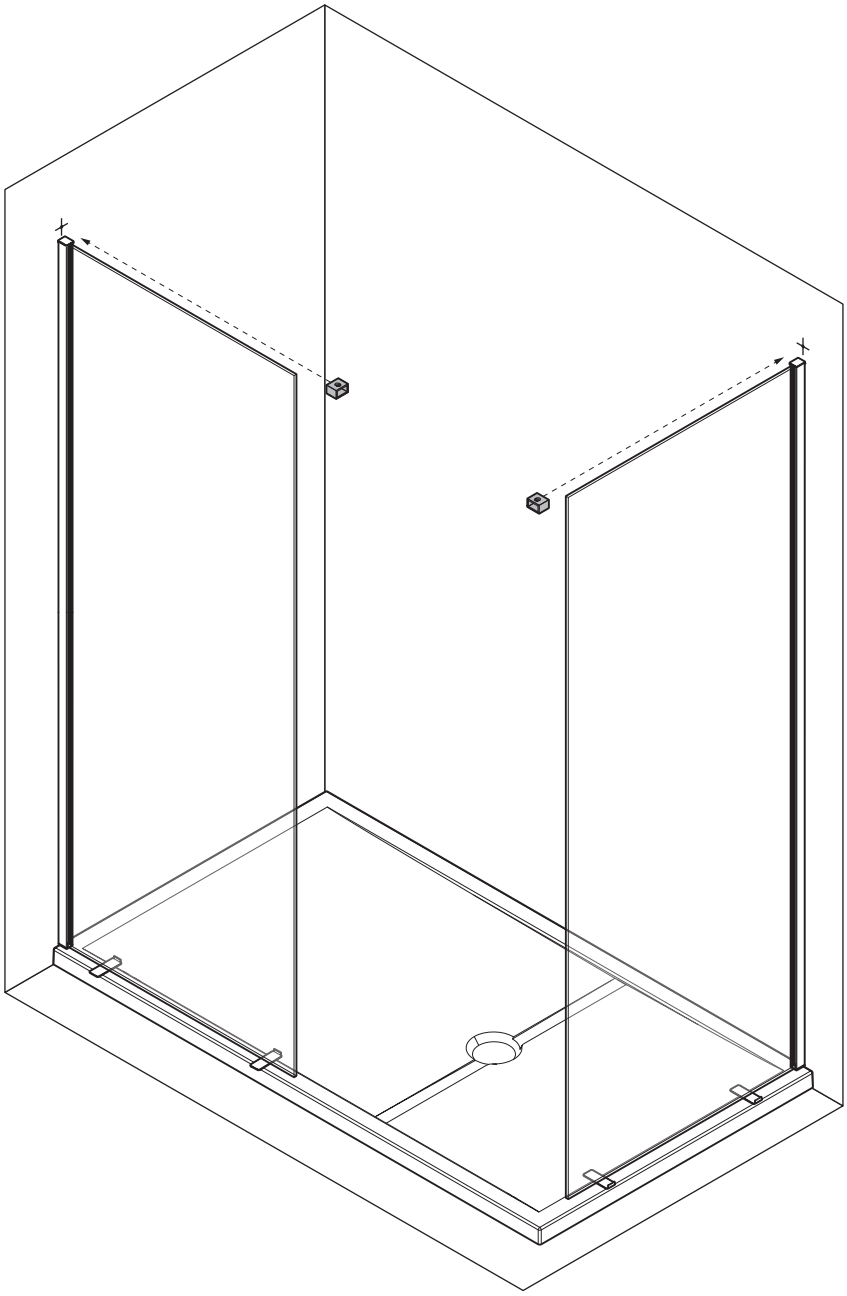

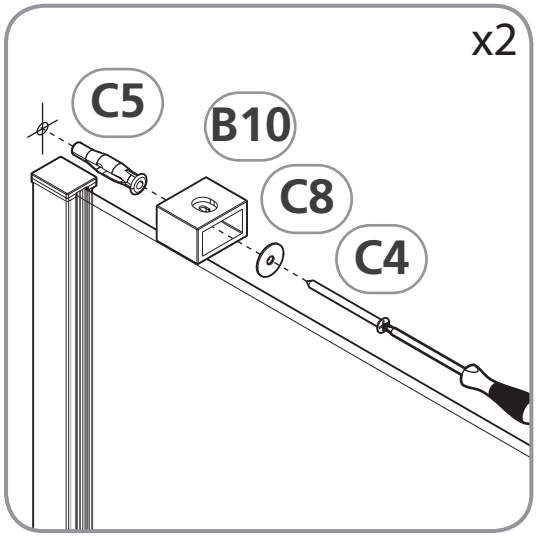

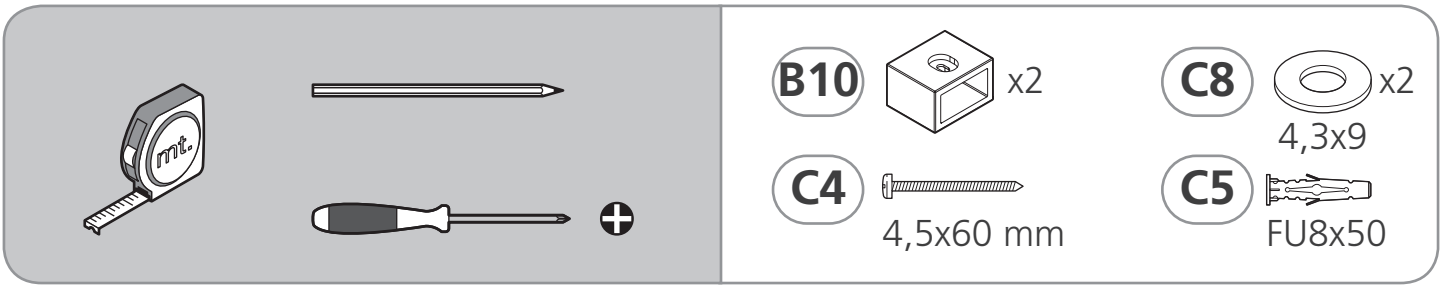

5 kit 1 - kit 3 HH

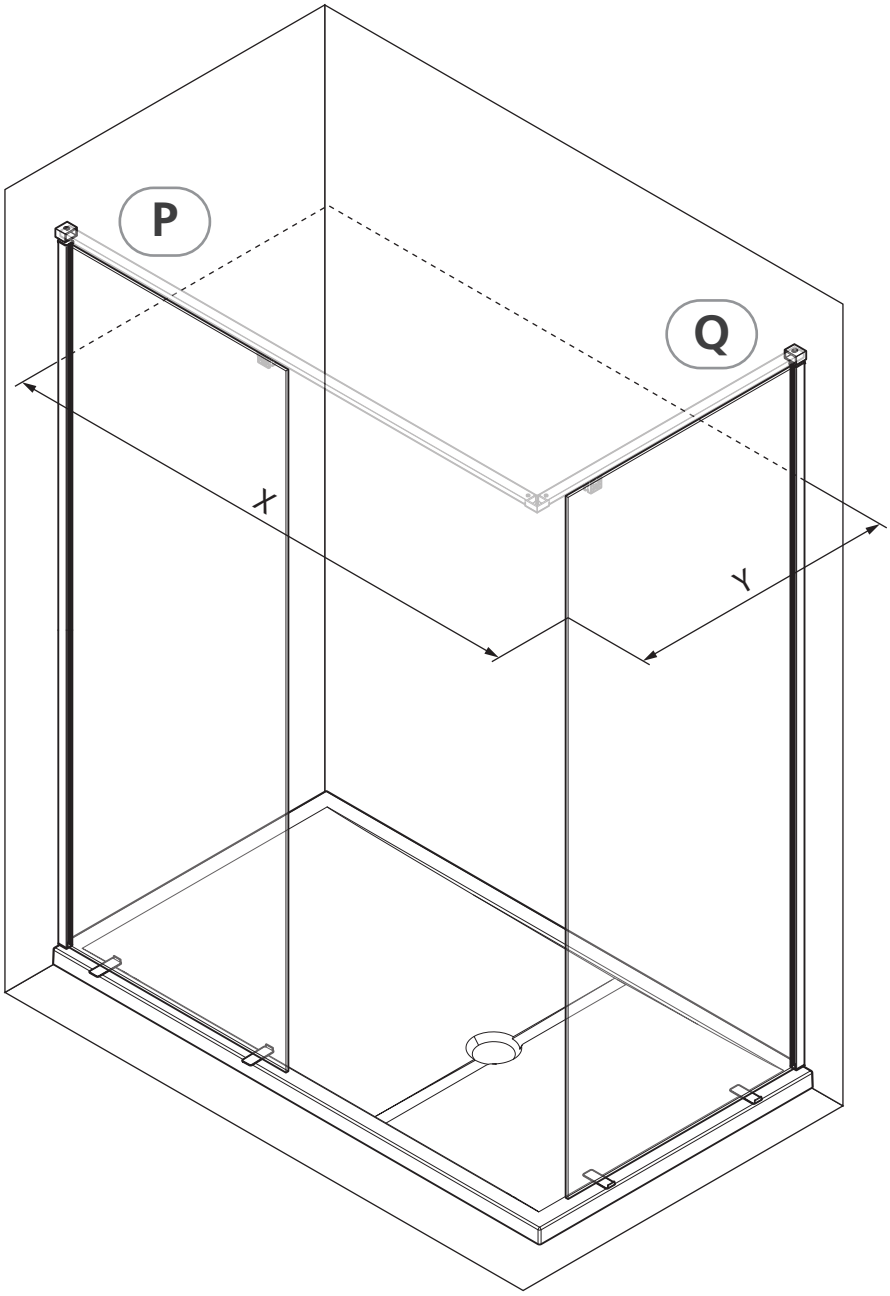

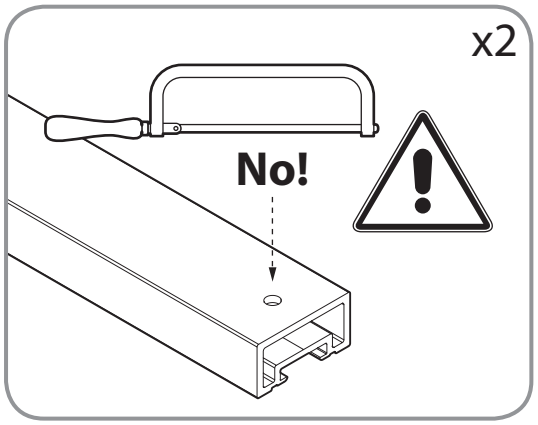

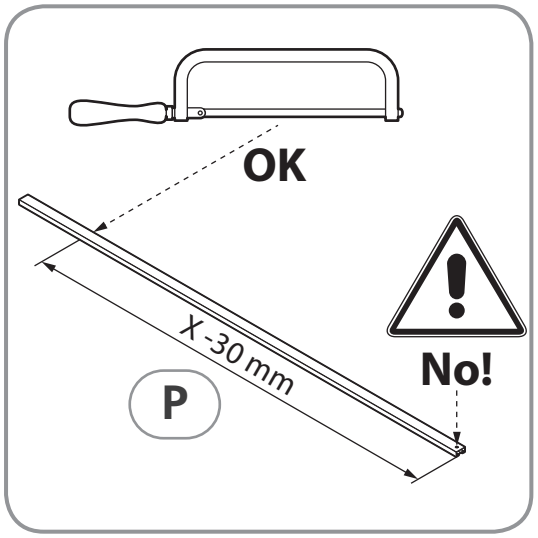

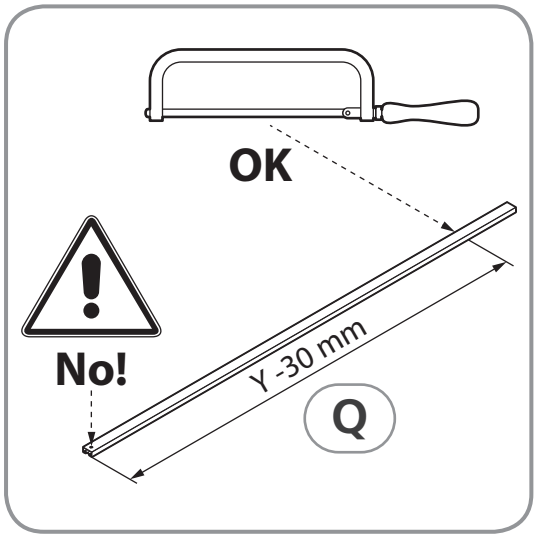

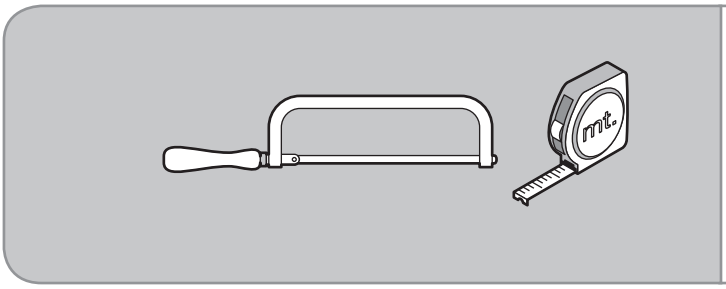

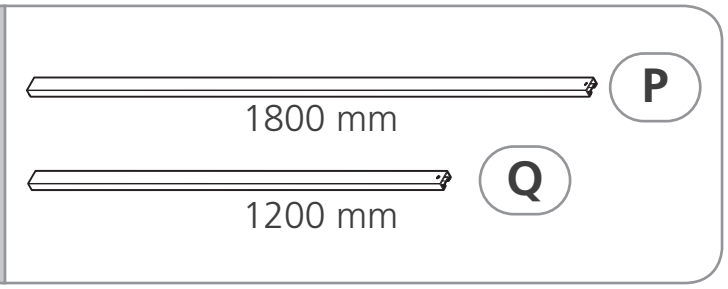

HH kit 1 - kit 3

6

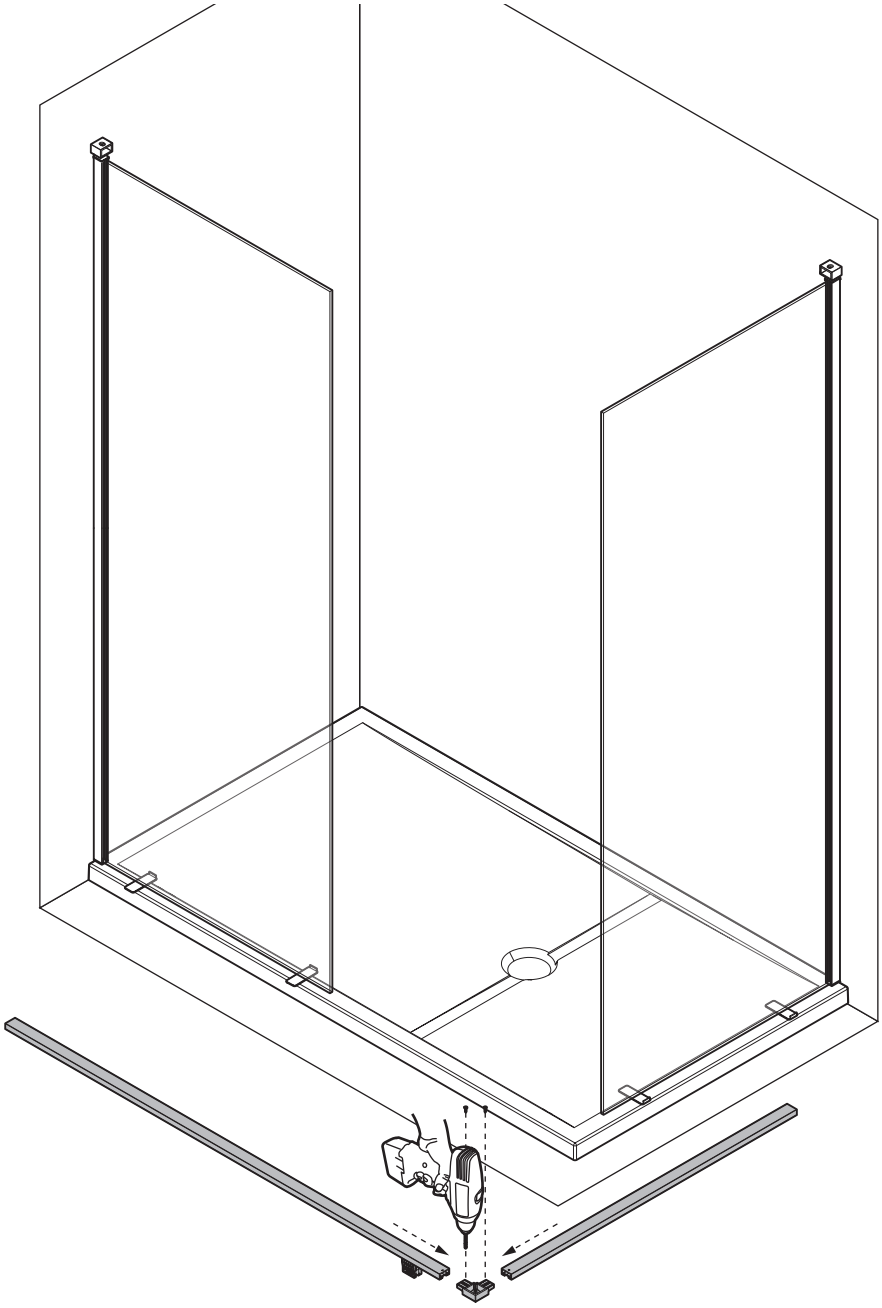

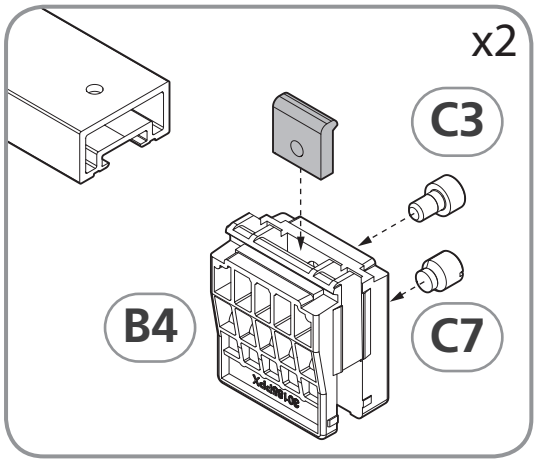

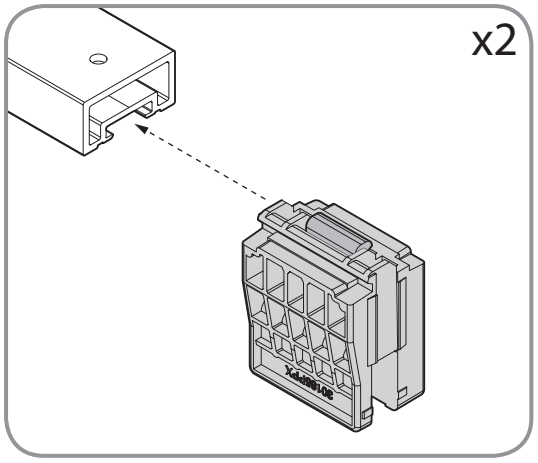

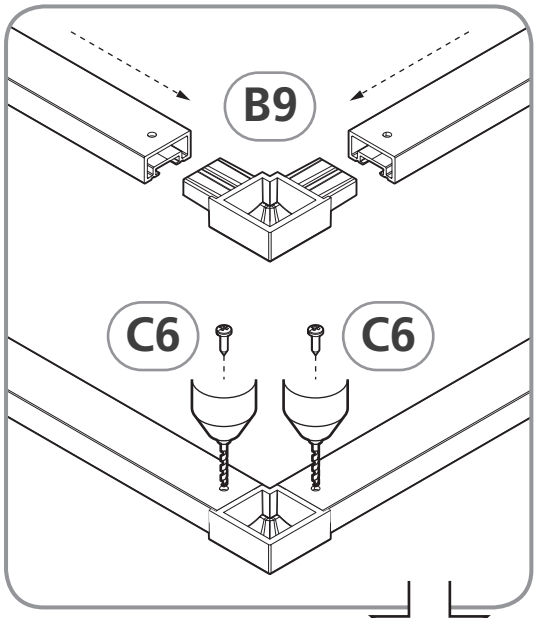

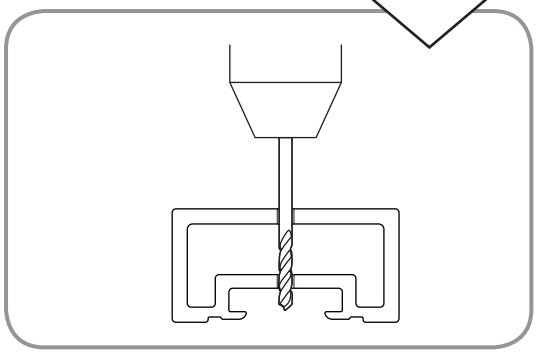

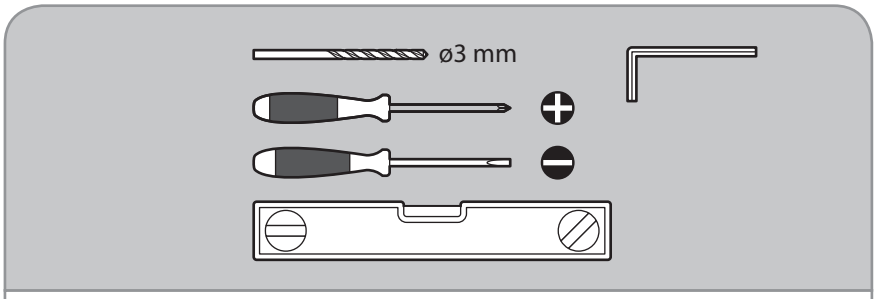

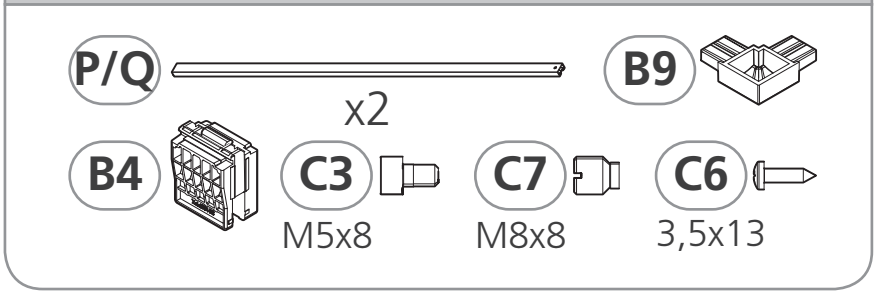

7 kit 1 - kit 3 HH

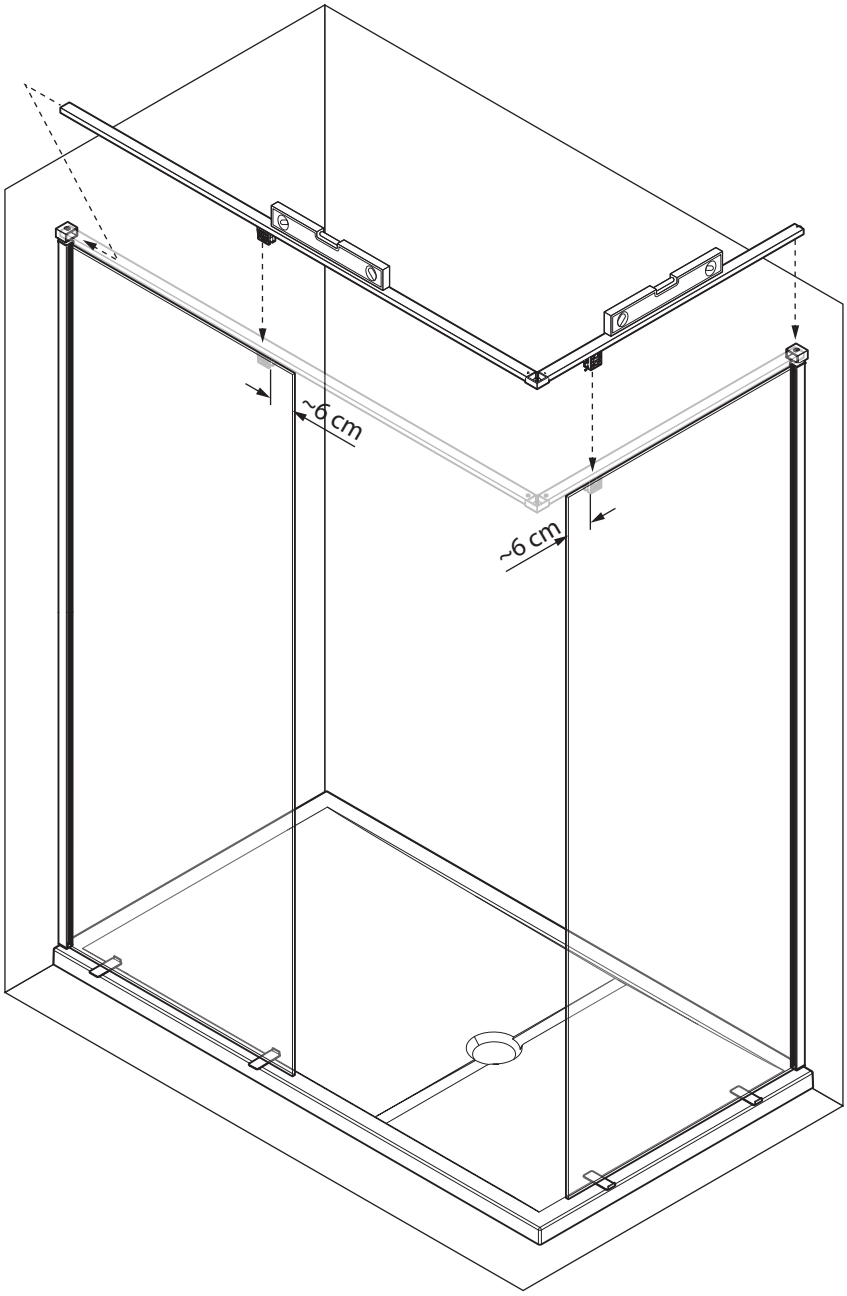

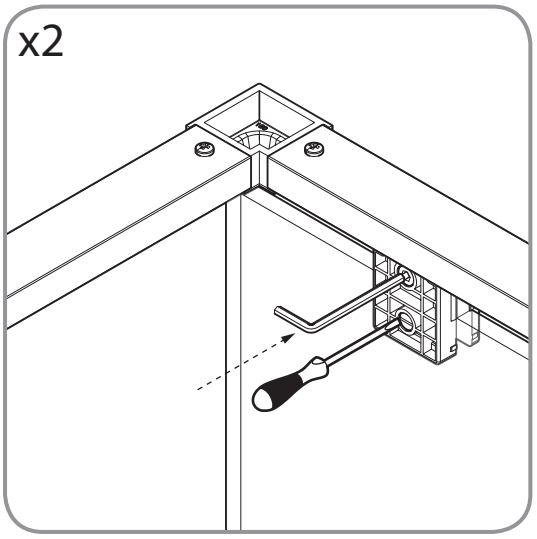

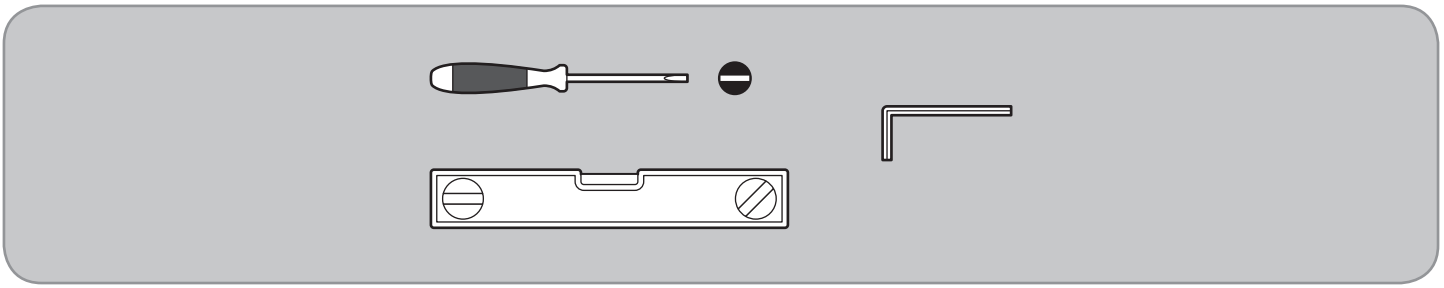

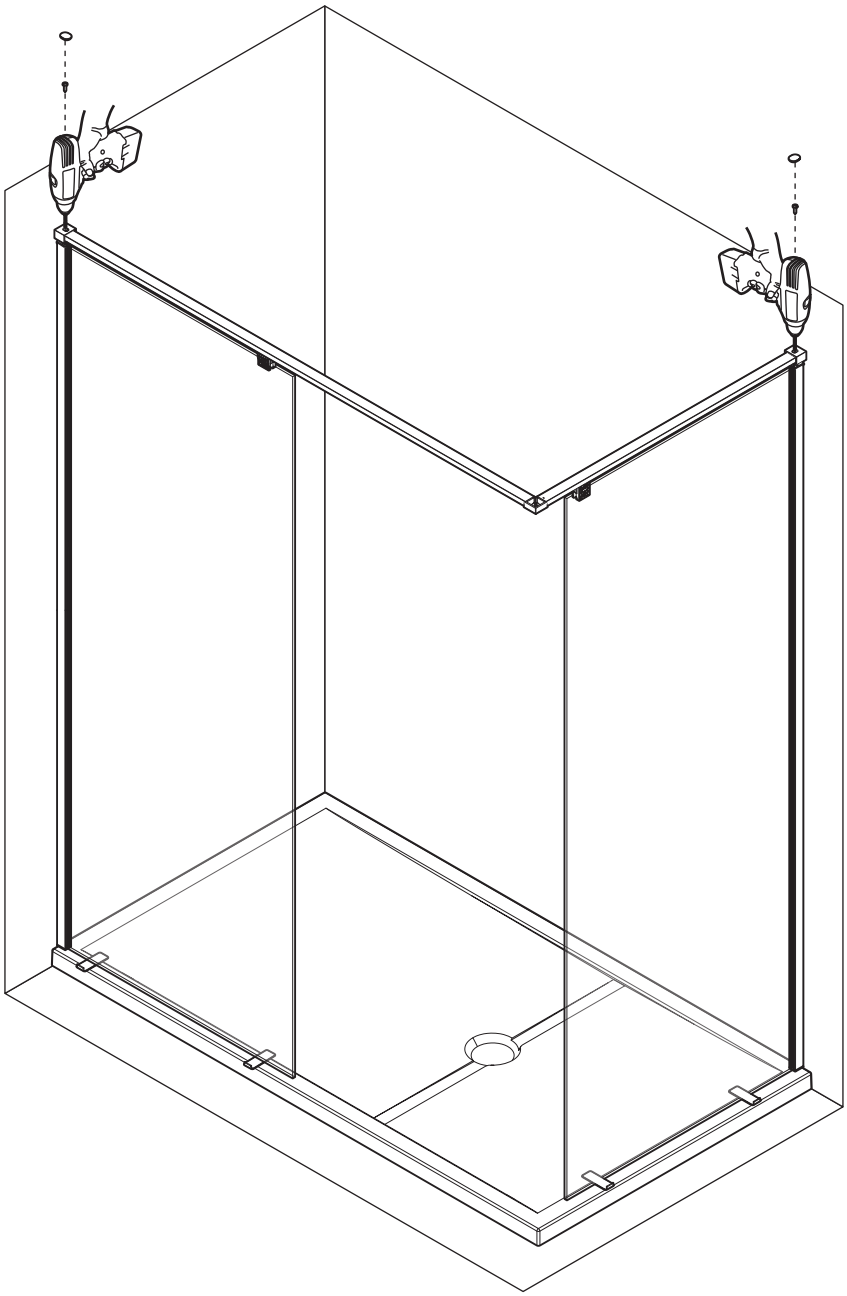

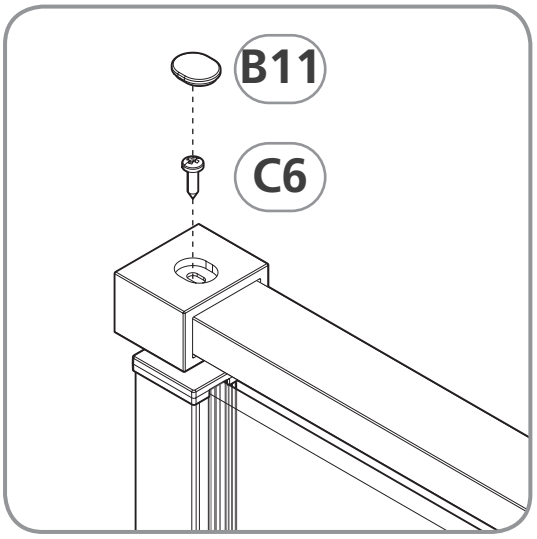
B11
C6

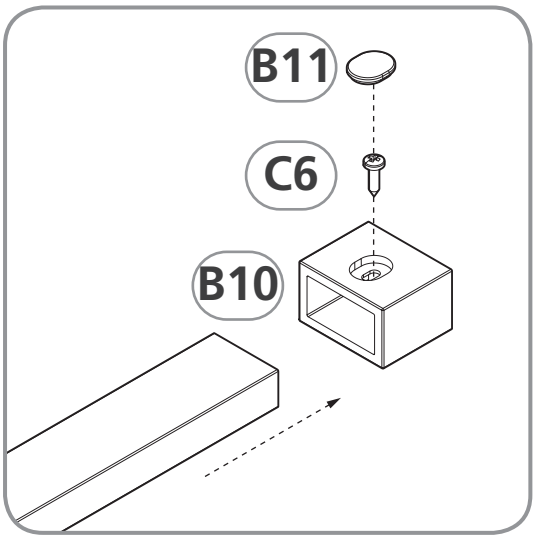
B11
C6
B10

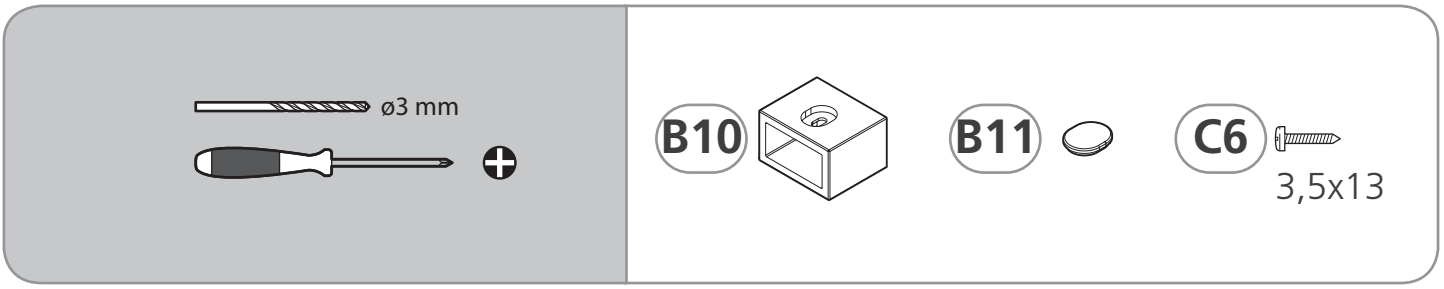
ø3 mm
B10
B11
C6
3,5x13

9 kit 1 - kit 3 HH

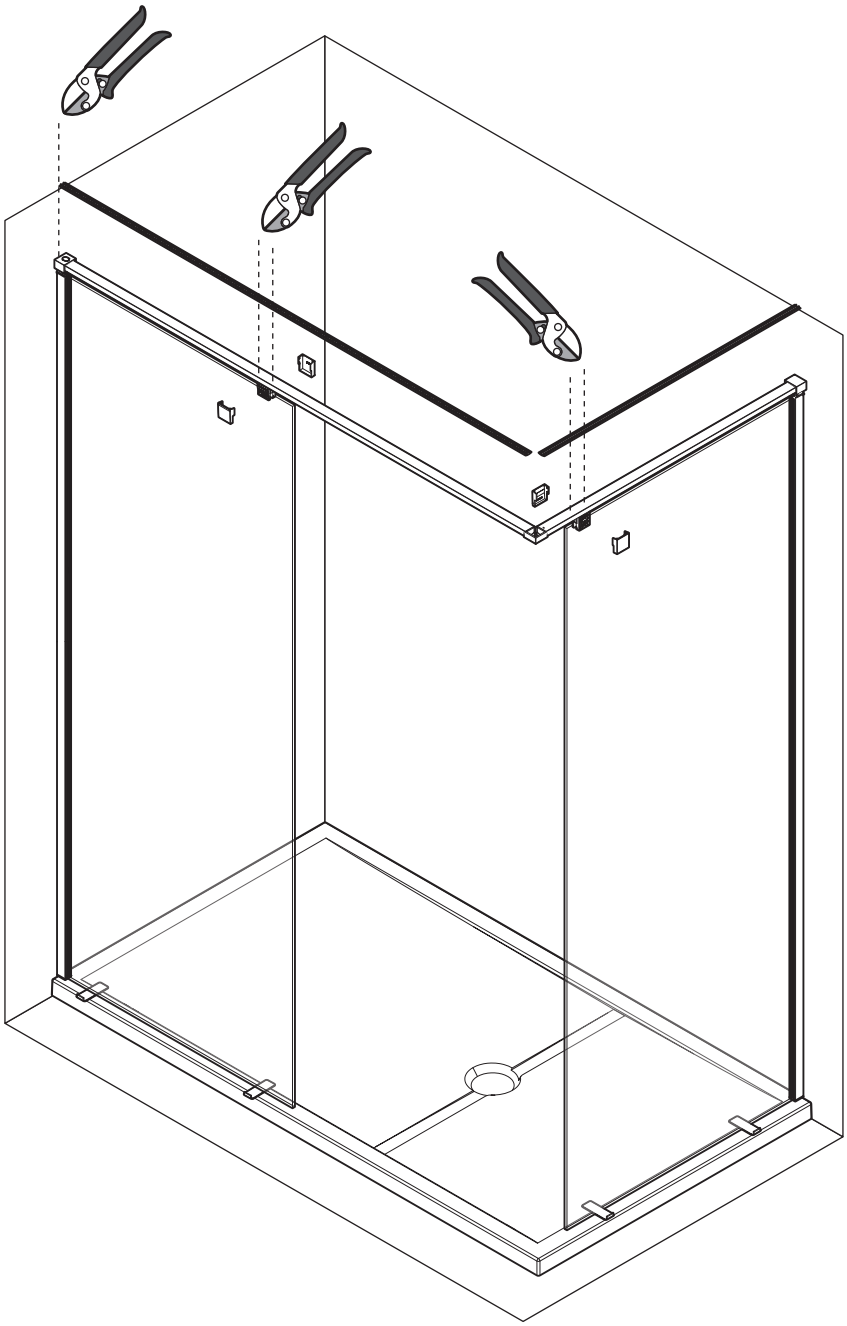

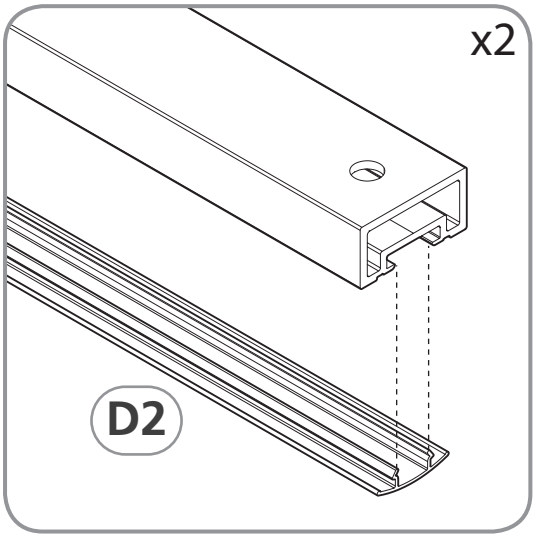

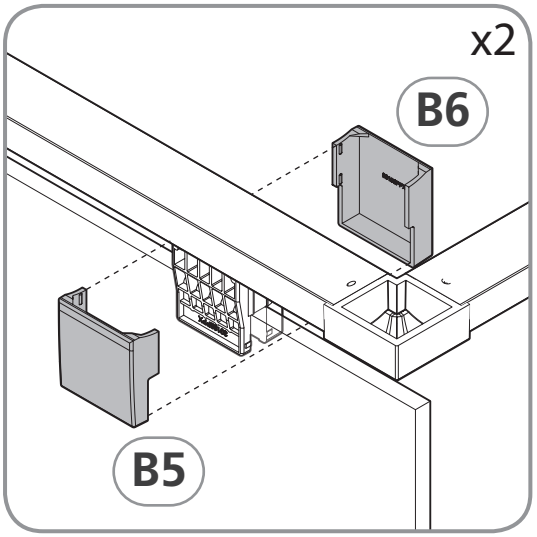

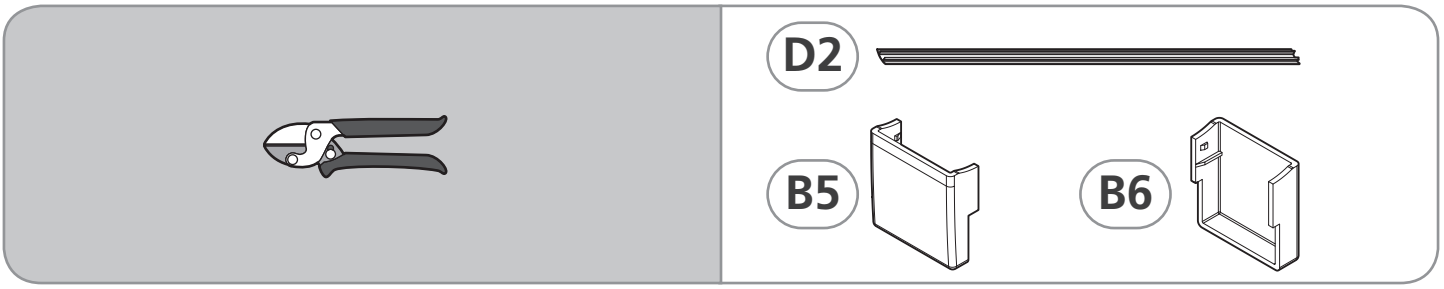

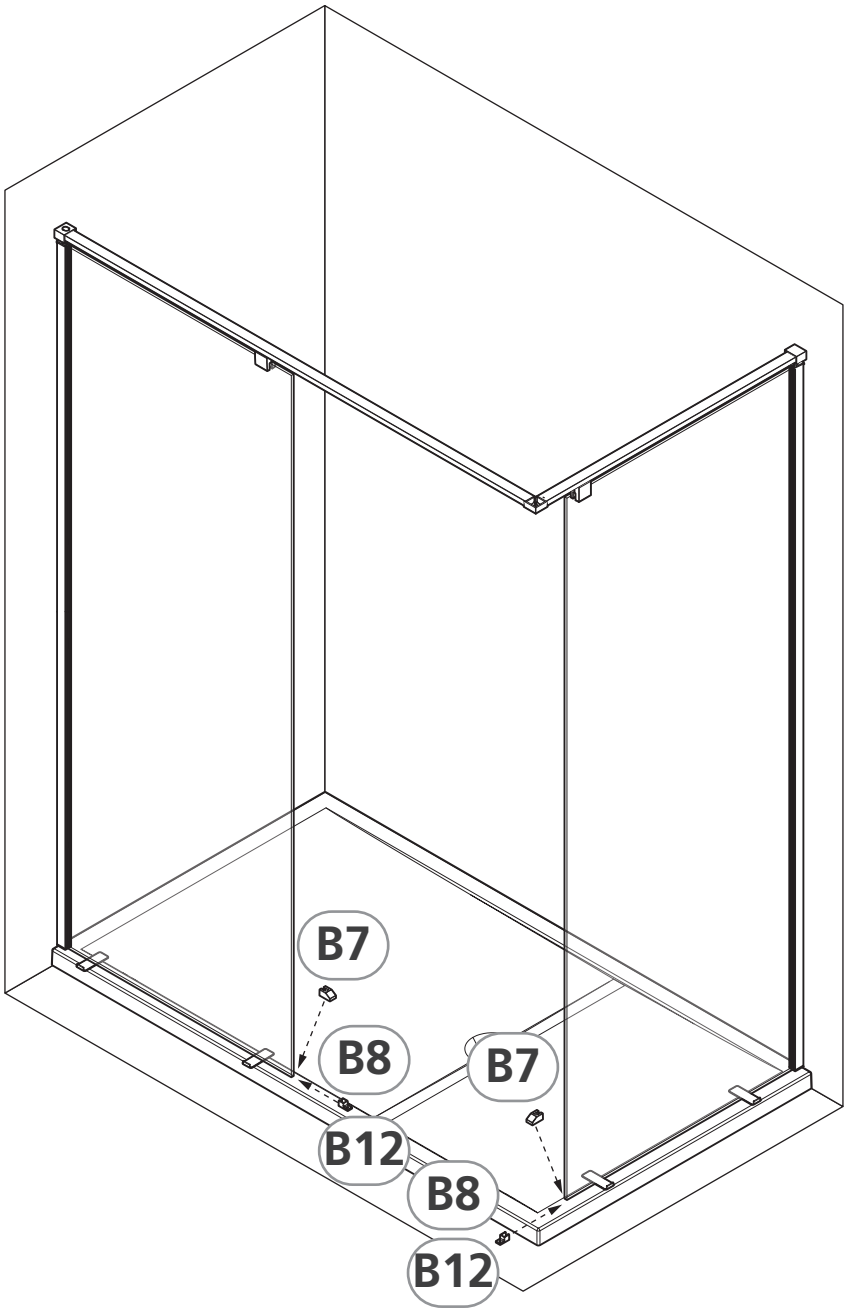

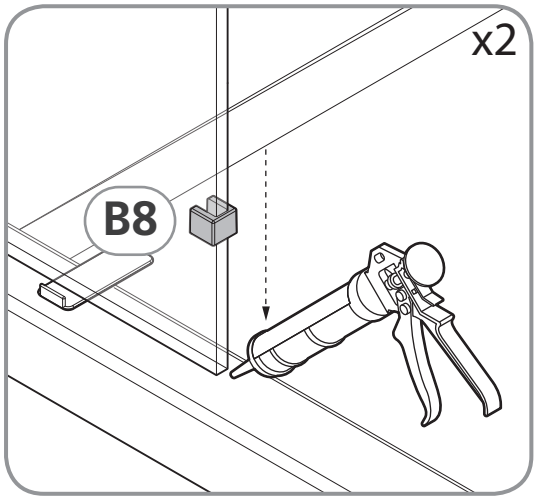

Ceramic/Acrilic

OU BIEN

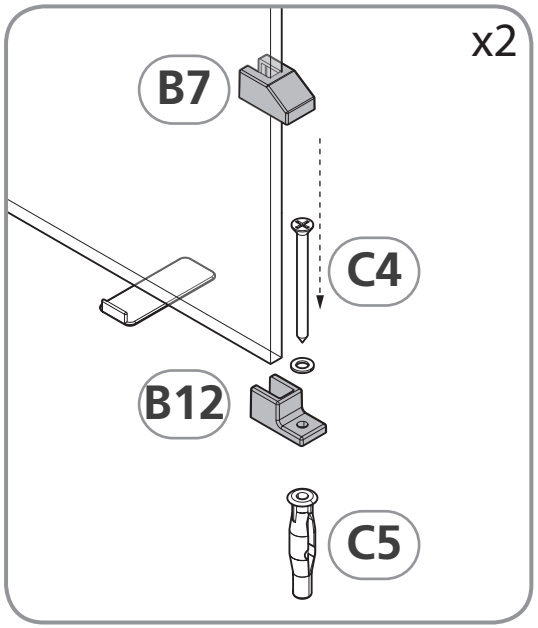

Sol/Carrelage

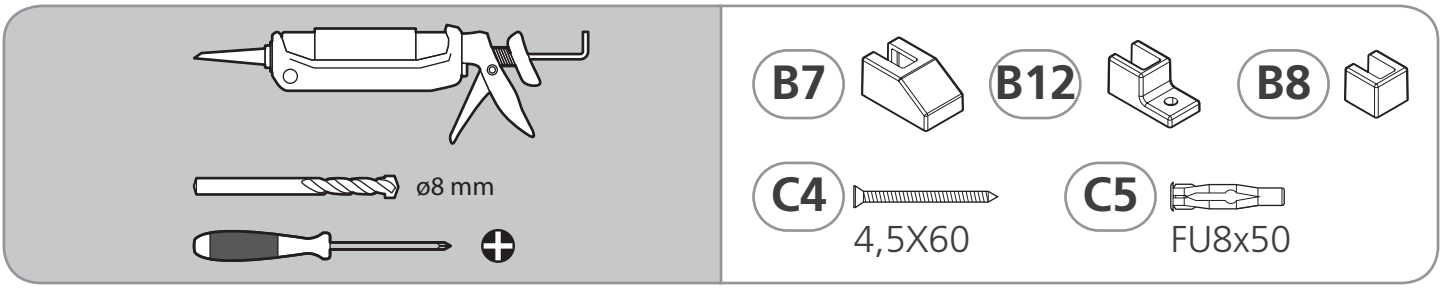

11 kit 1 - kit 3 HH

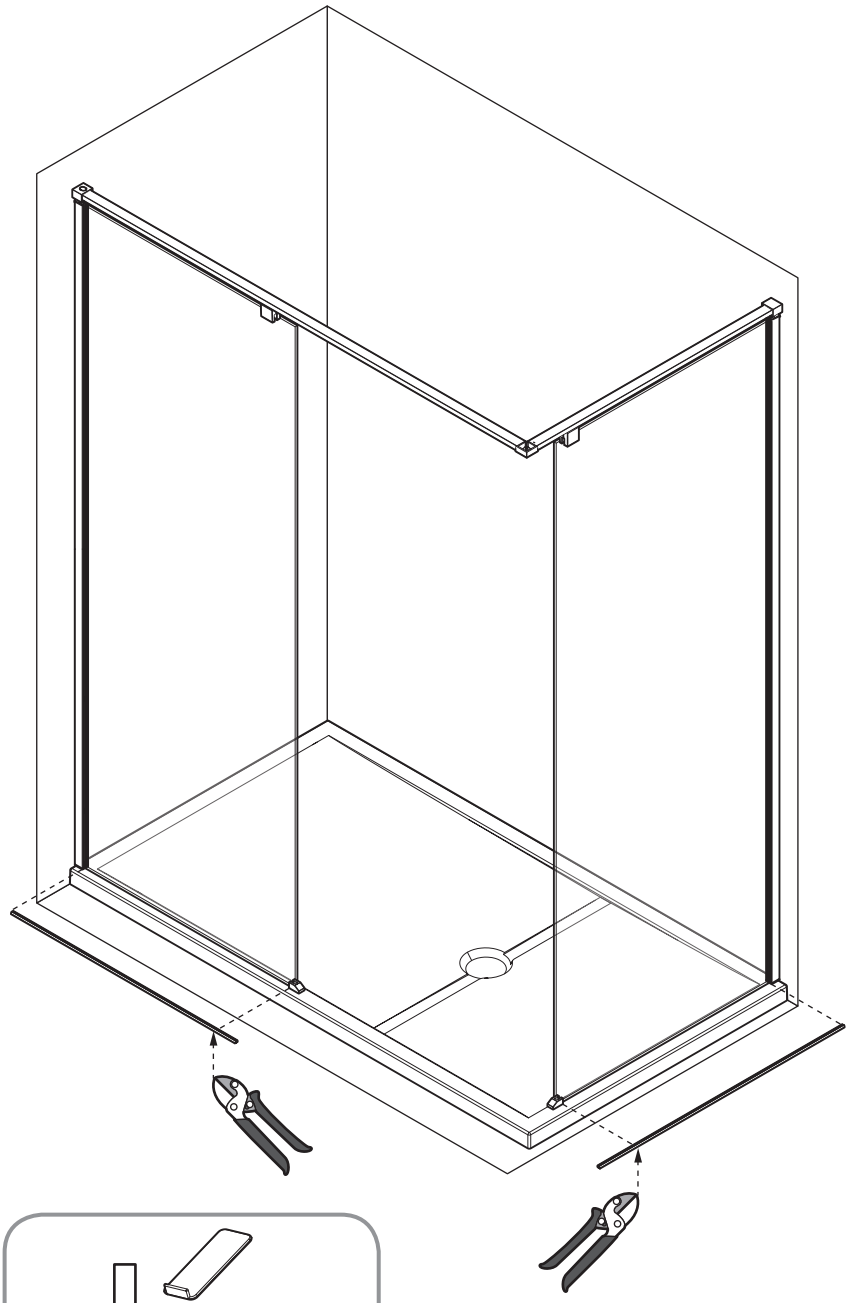

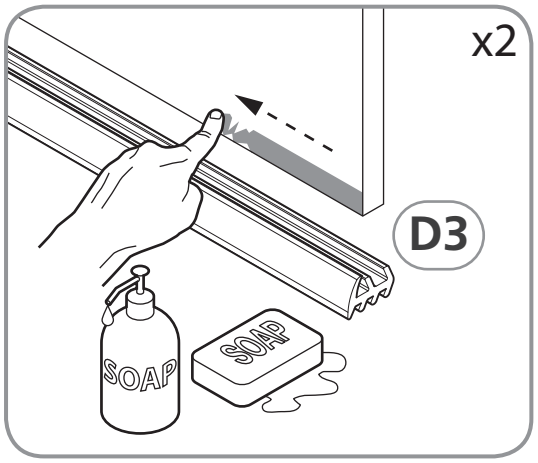

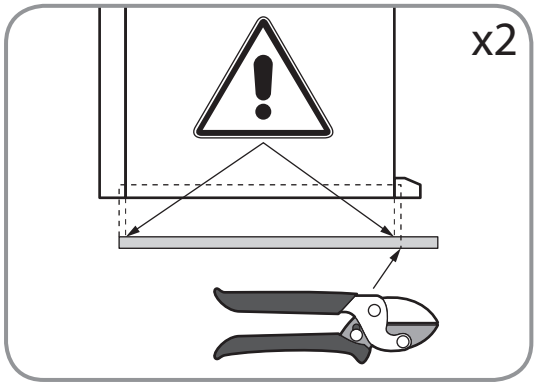

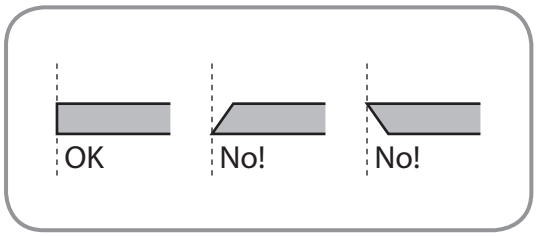

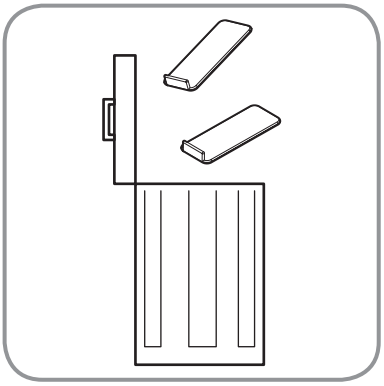

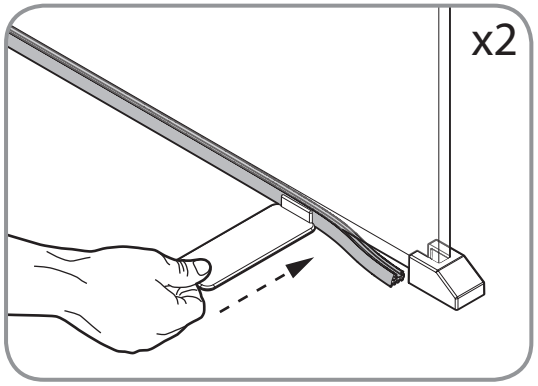

D3

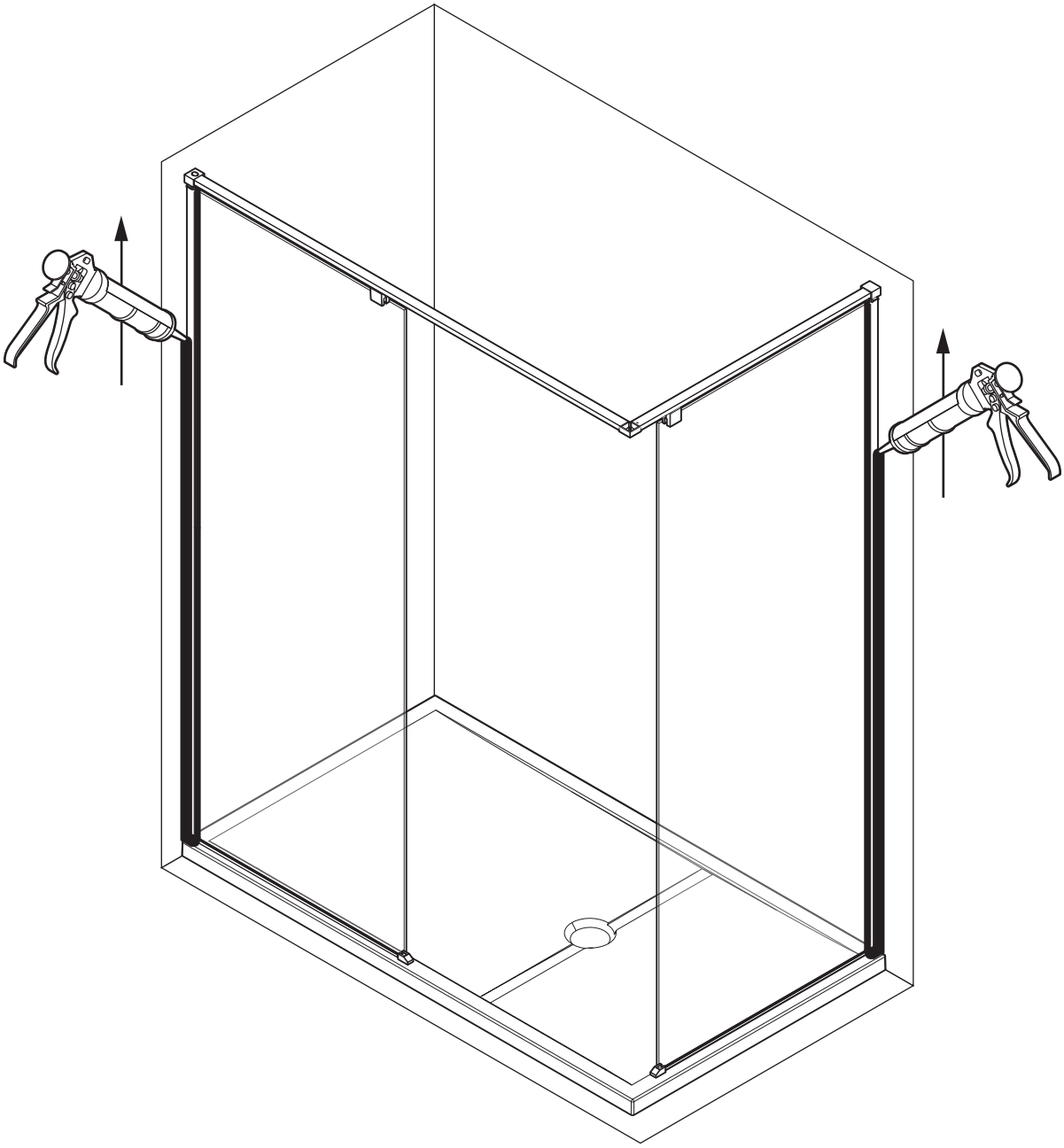

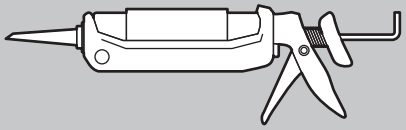

24h

Eliseo kit

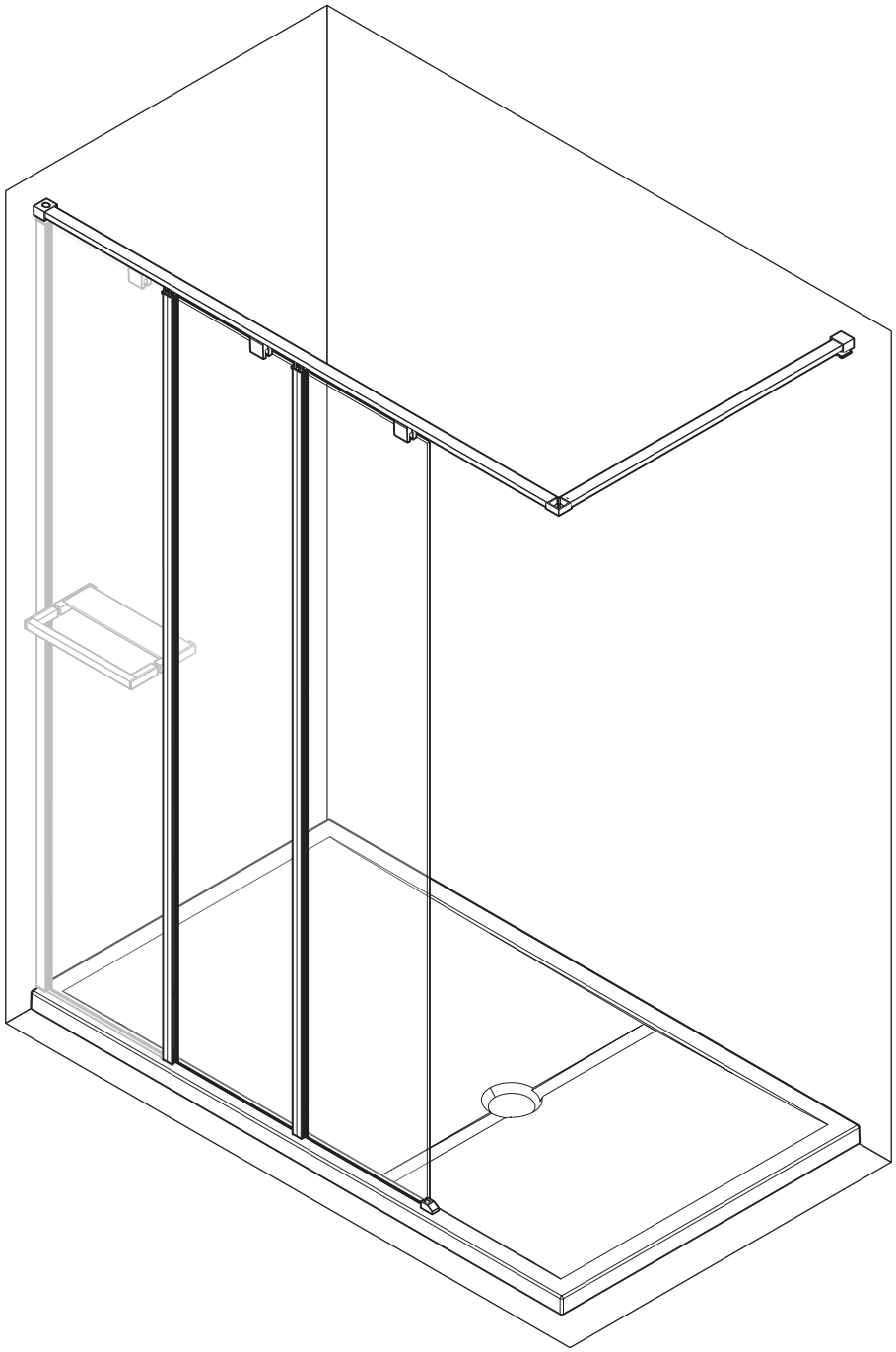

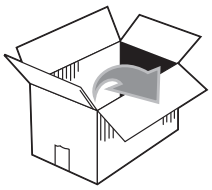

B1 x1	B2 x1	B3 x6	B4 x3	B5 x3	B6 x3
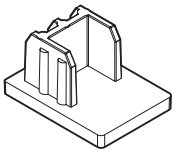	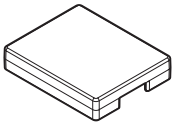	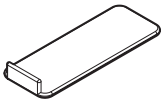	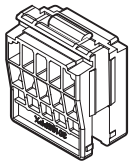	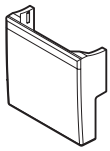	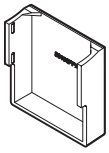

B7 x1	B8 x1	B9 x1	B10 x2	B11 x2	B12 x1
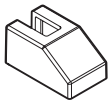		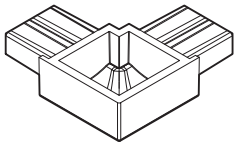	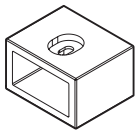		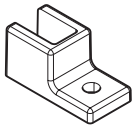

C1 x4	C2 x4	C3 x3	C4 x3	C5 x3	C6 x4	C7 x3
				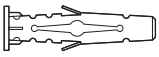		
S6	4x35	M5x8	4,5x60	FU8x50	3,5x13	M8x8

D1 x1	D2 x2	D3 x1	C8 x2
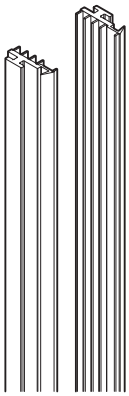	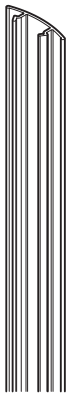	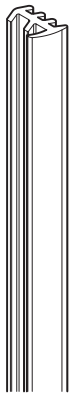	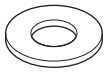
			4,3x9

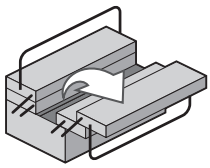

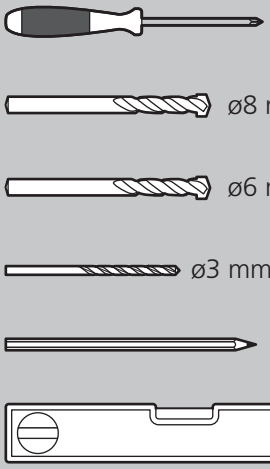

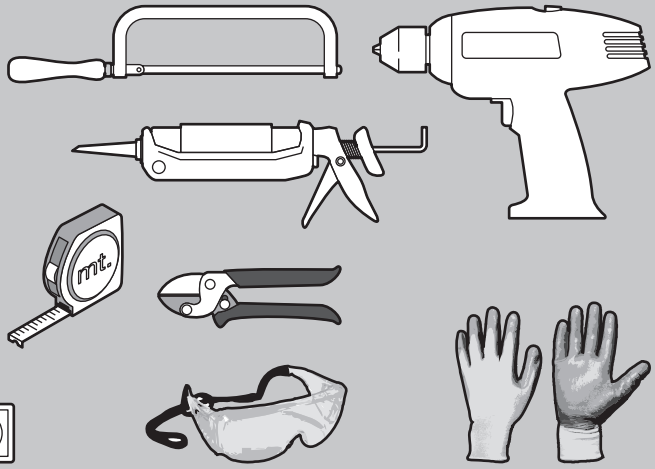

kit kit 1 - kit 2 1

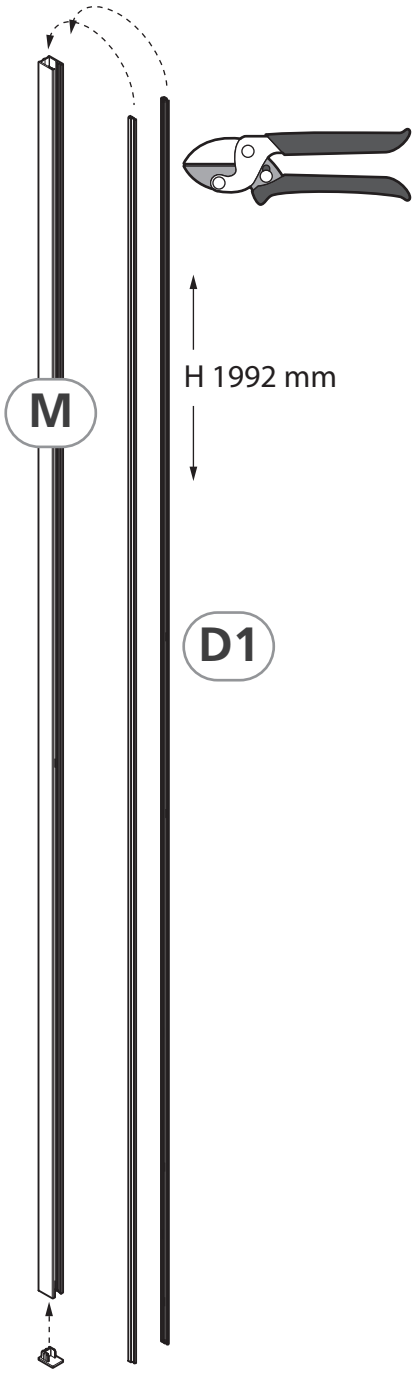

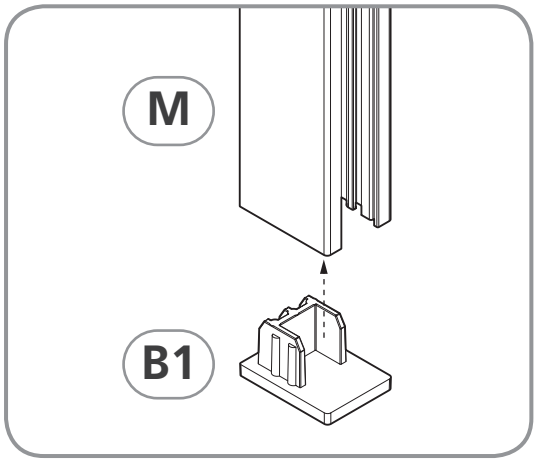

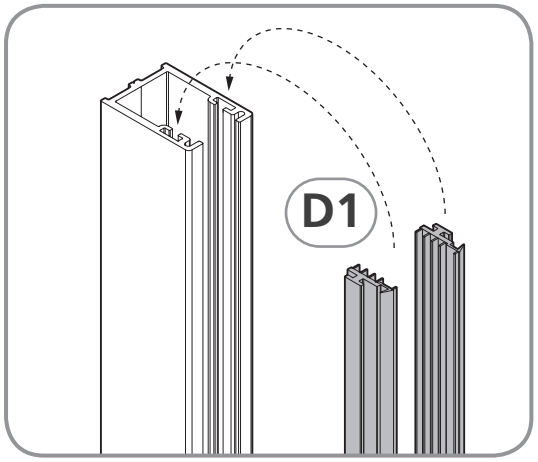

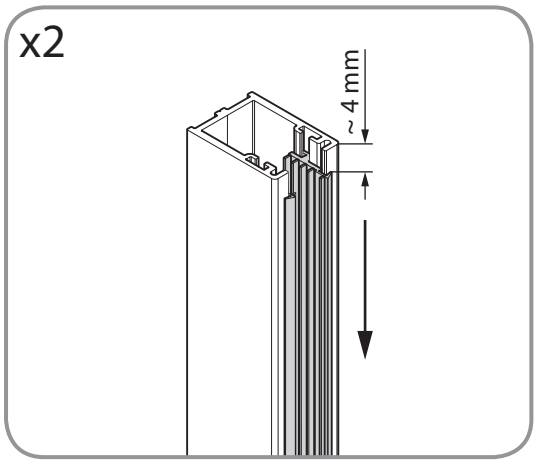

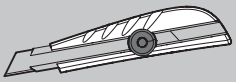

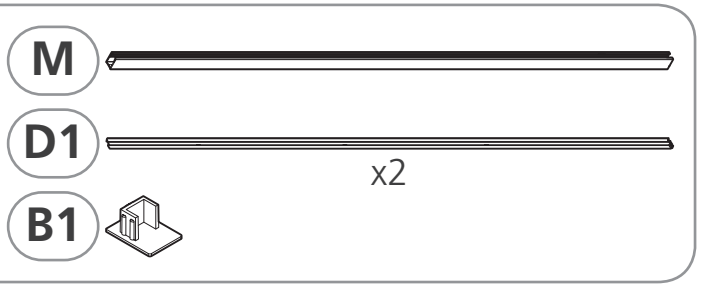

2 kit 1 - kit 2 kit

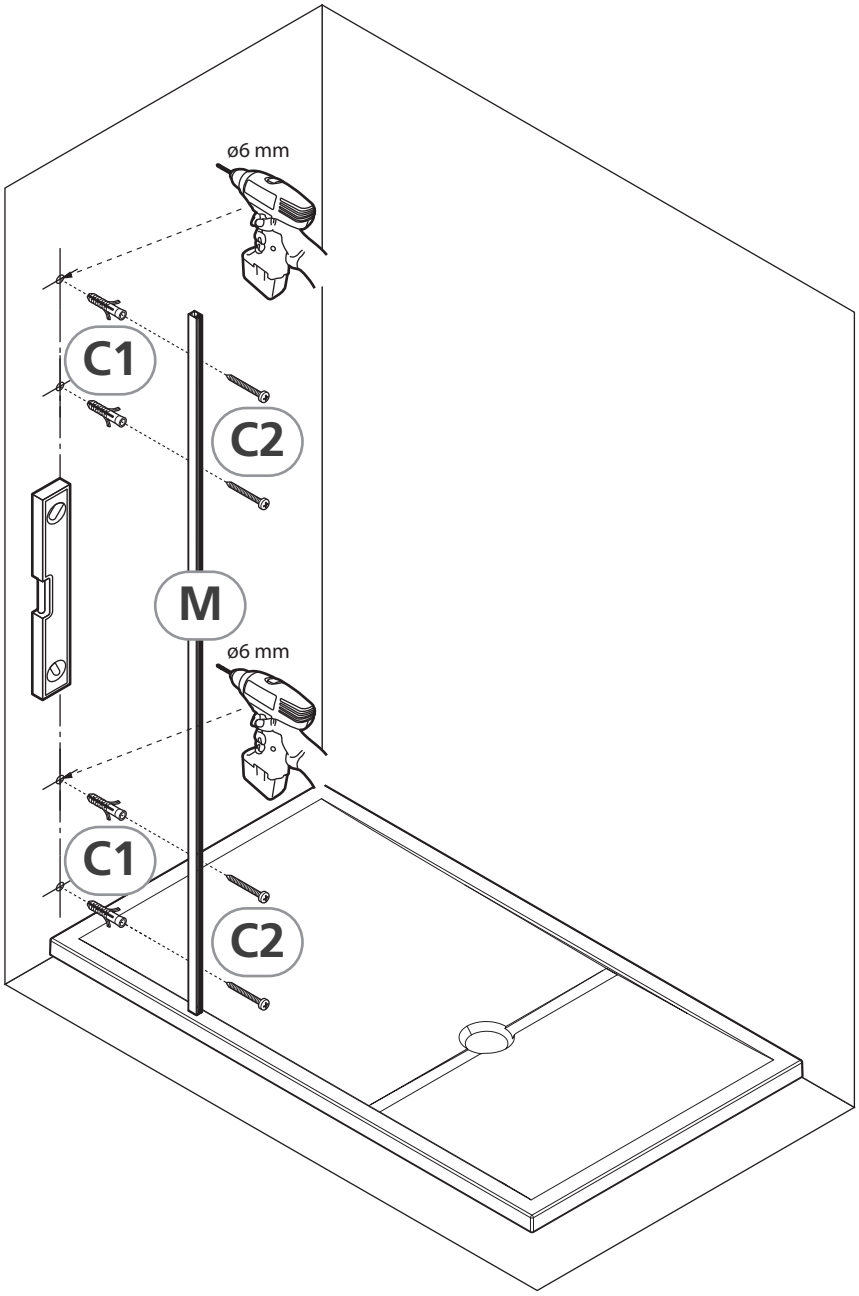

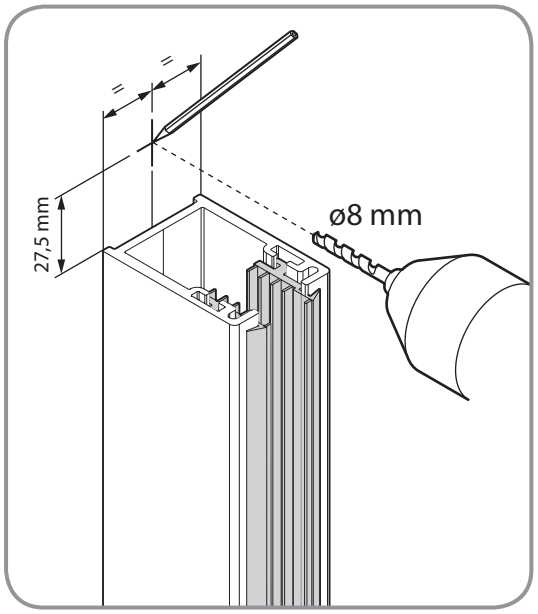

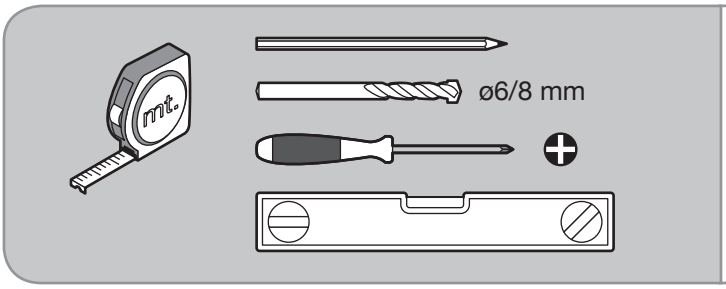

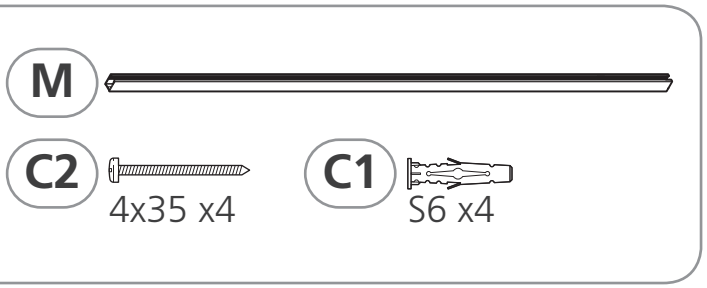

OPTION

A

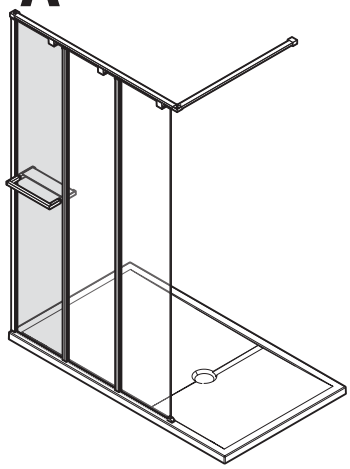

B

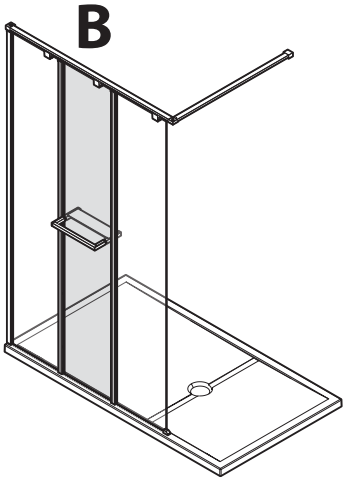

C

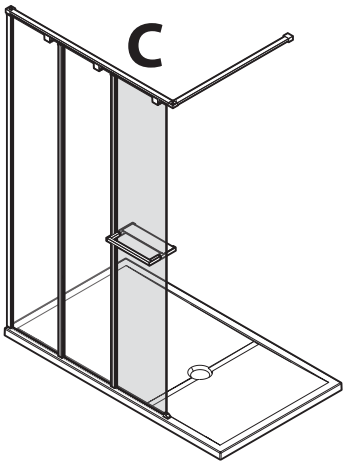

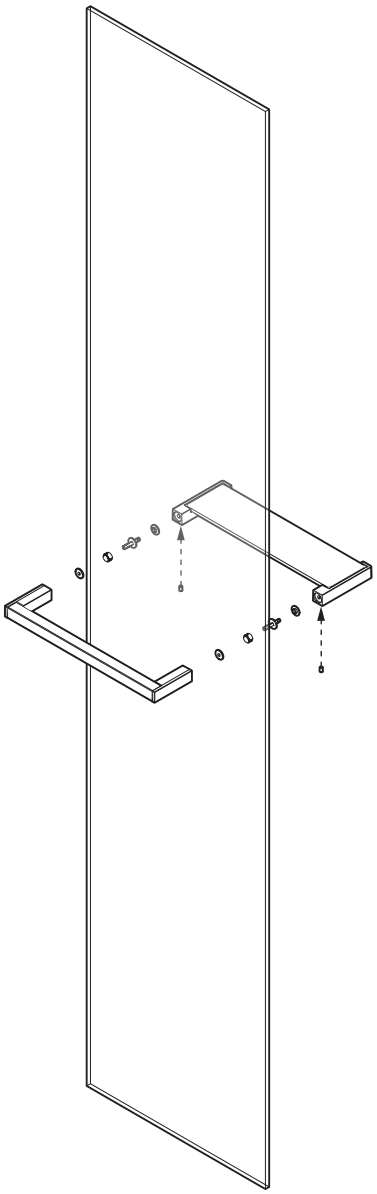

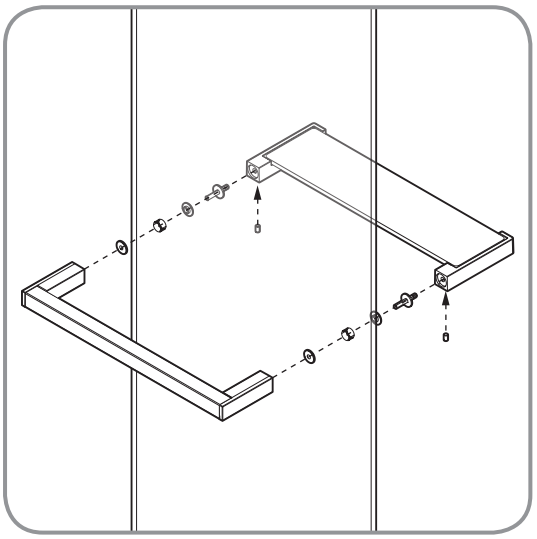

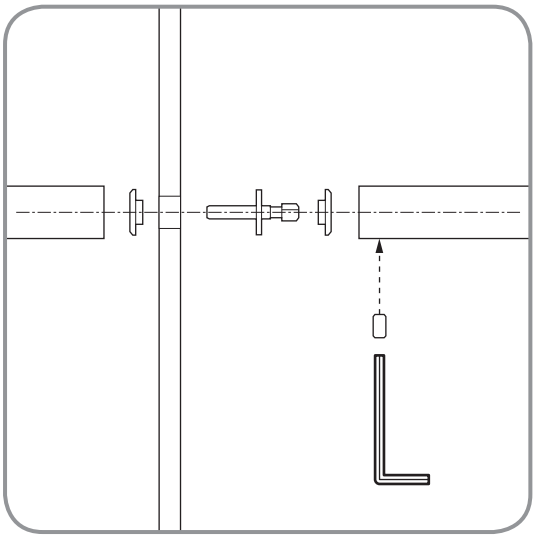

A-B-C

4 kit 1 - kit 2 kit

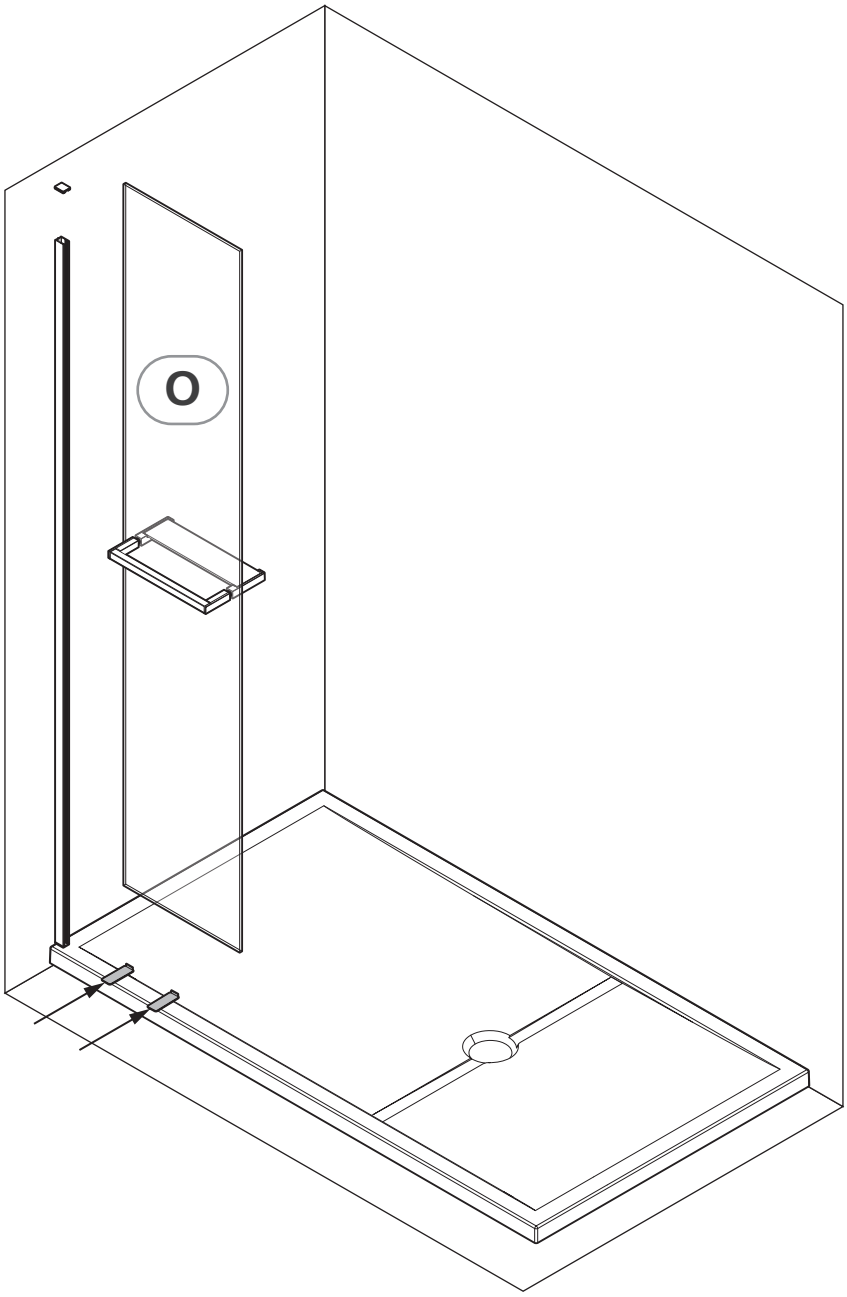

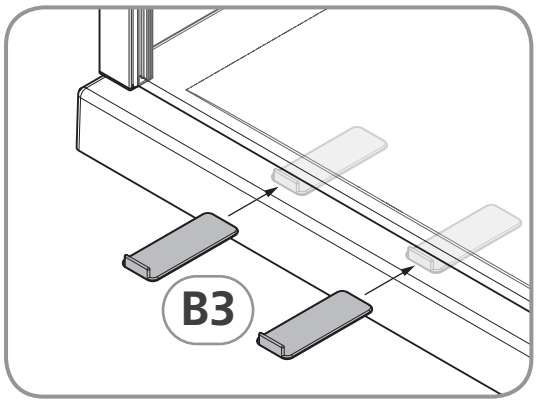

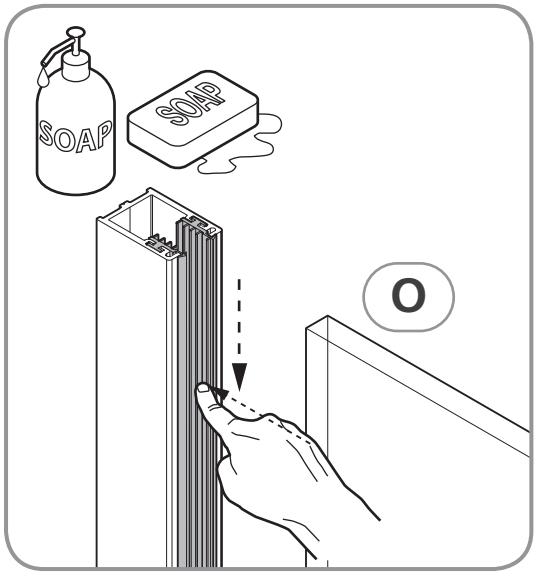

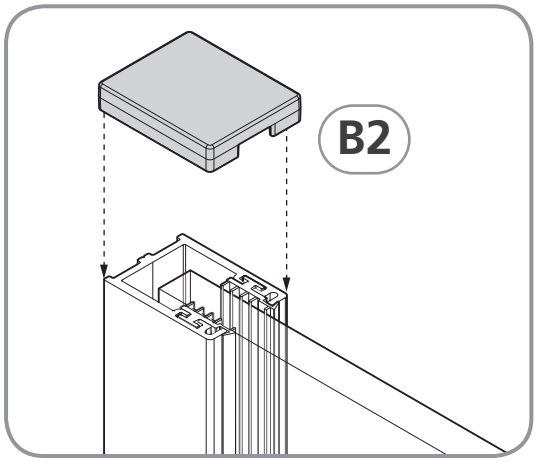

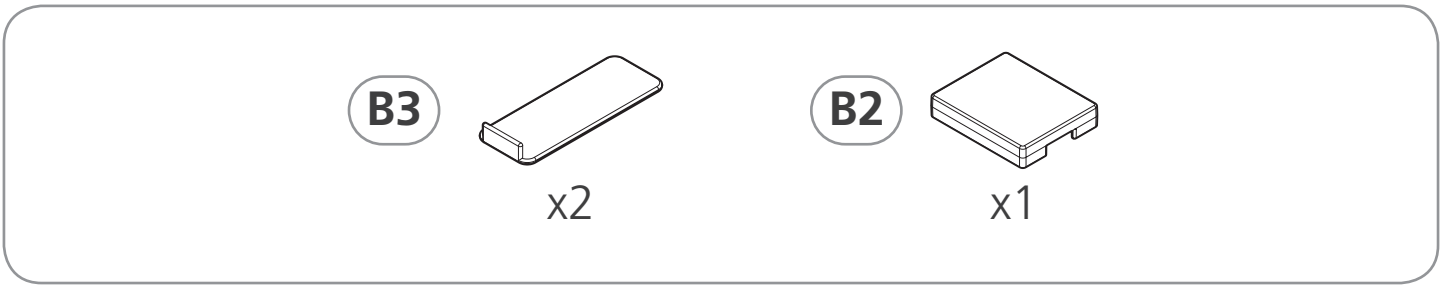

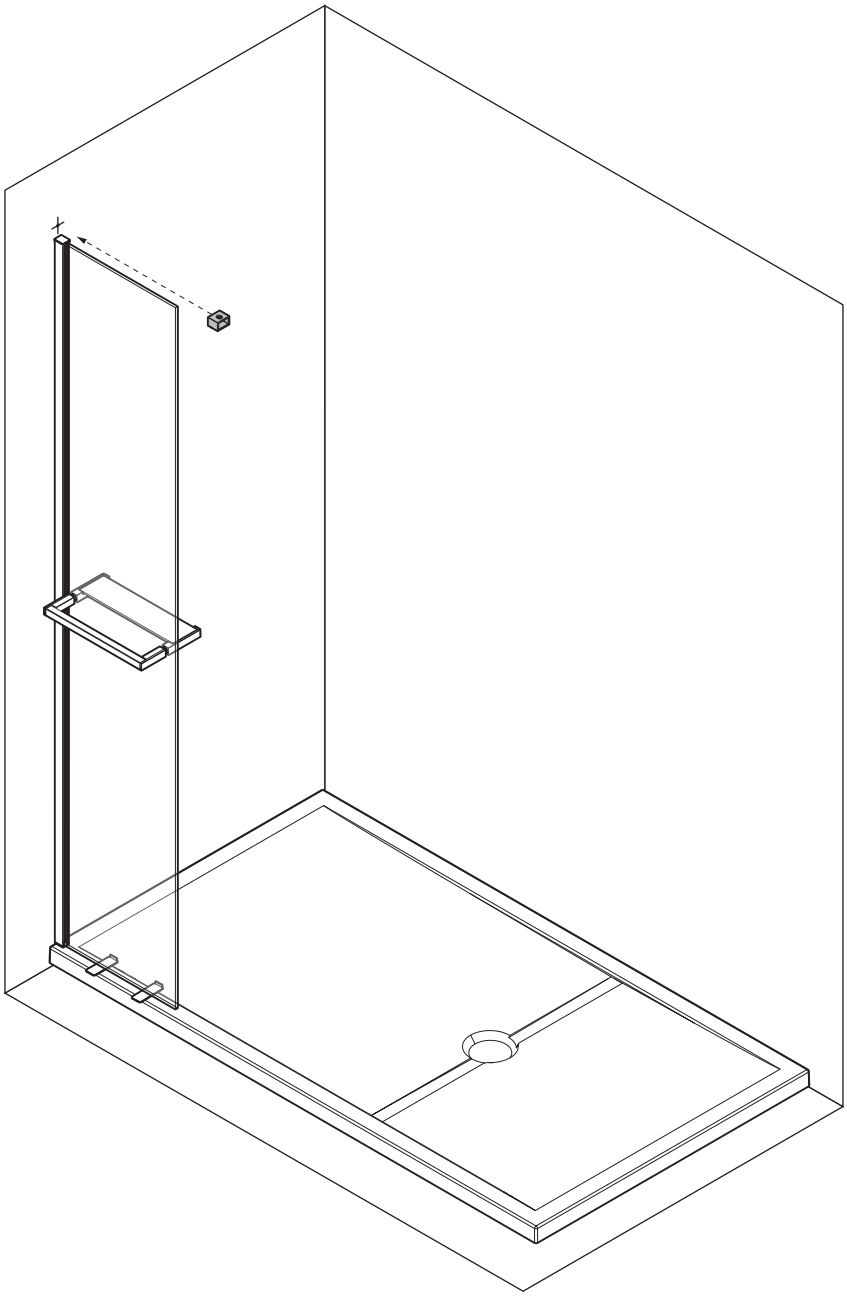

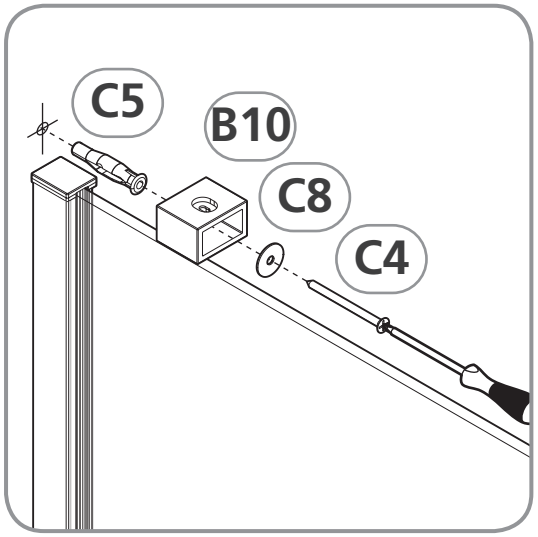

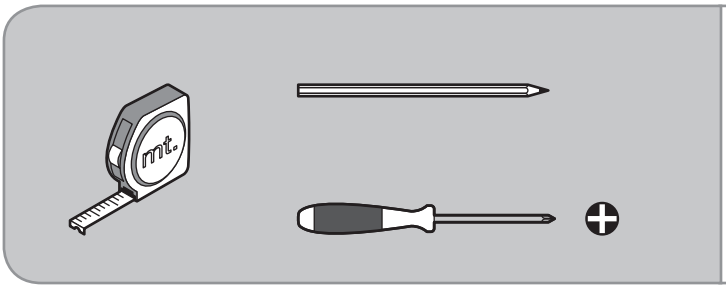

B10 x2

C8 x2 4,3x9

C4 4,5x60 mm

C5 FU8x50

6 kit 1 - kit 2 kit

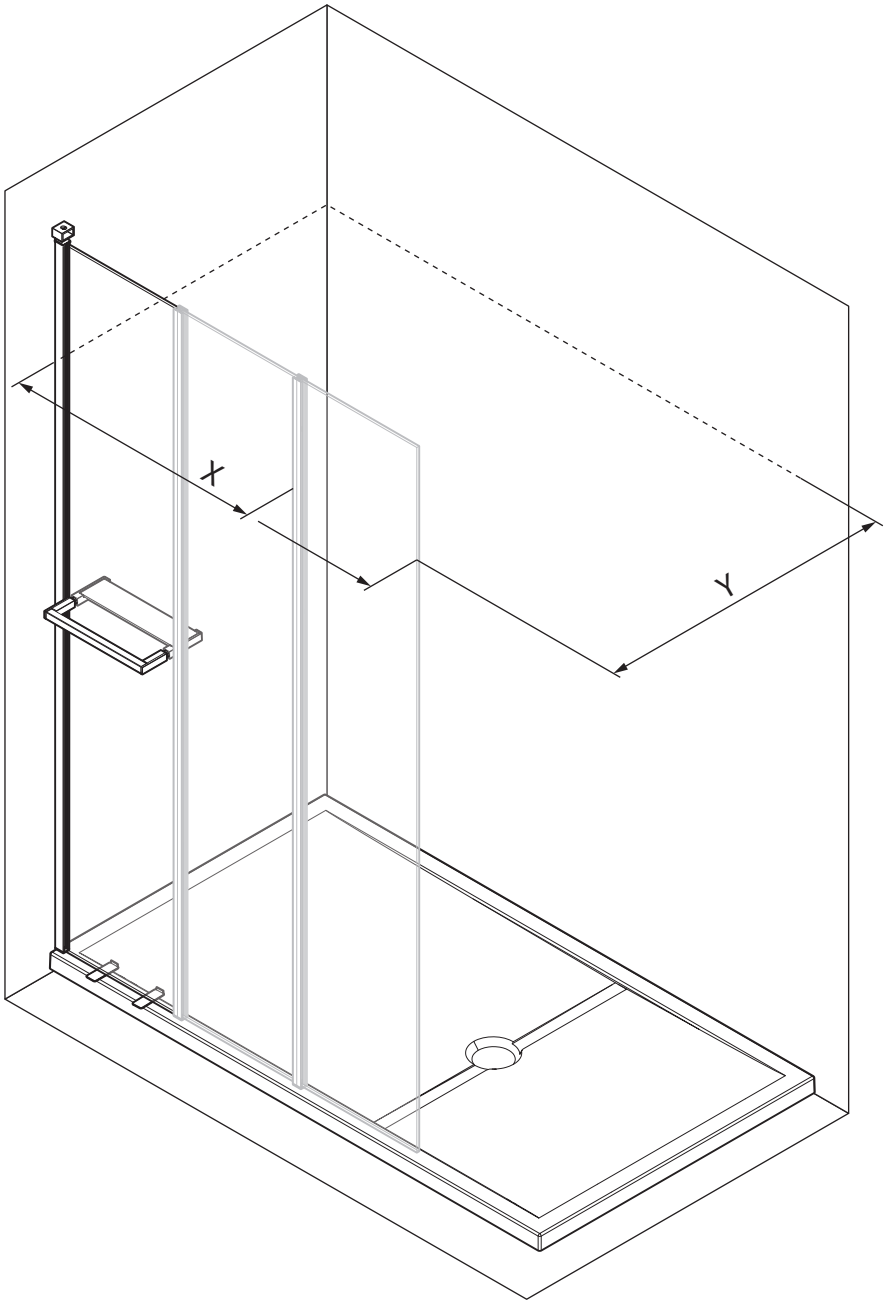

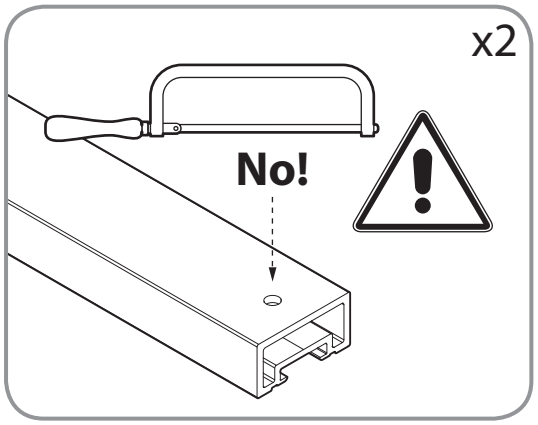

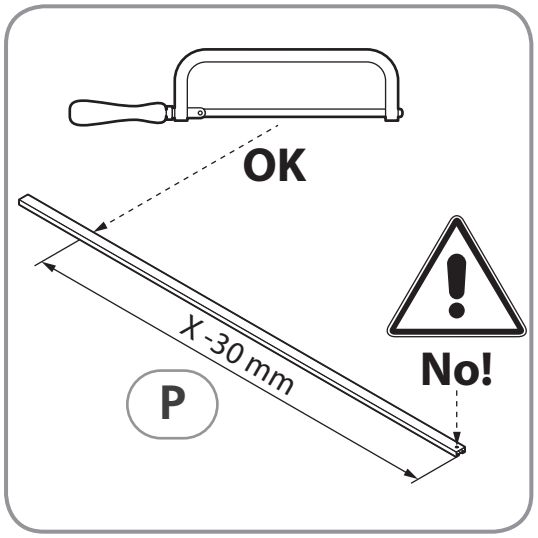

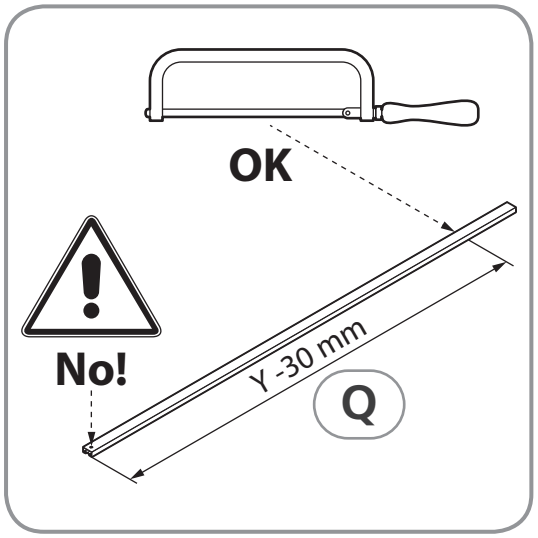

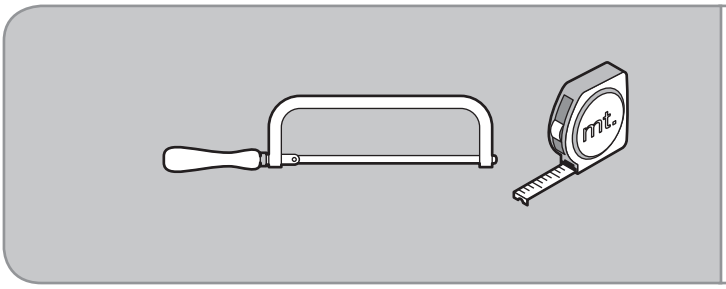

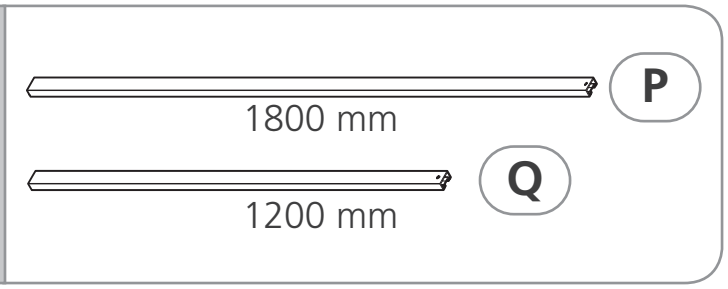

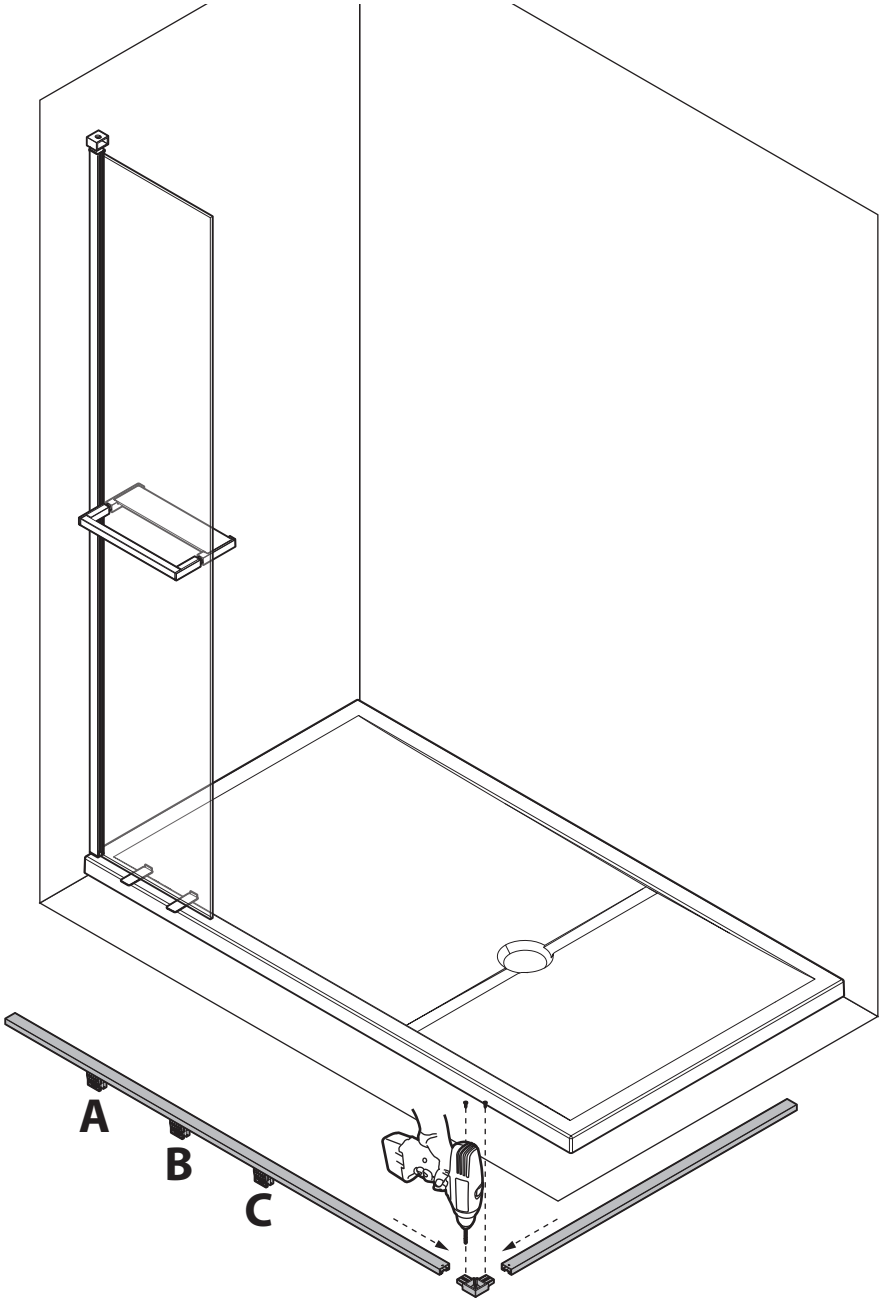
A
B
C

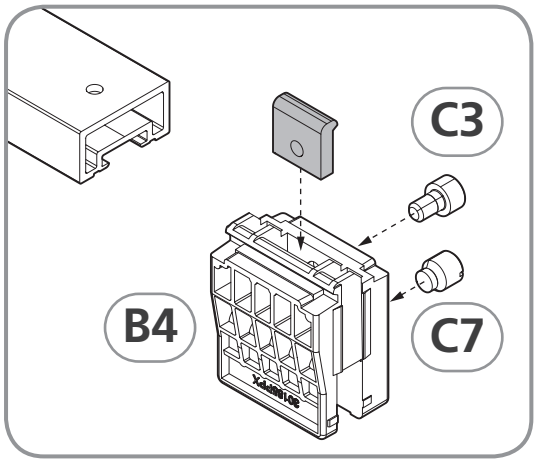
C3
B4
C7

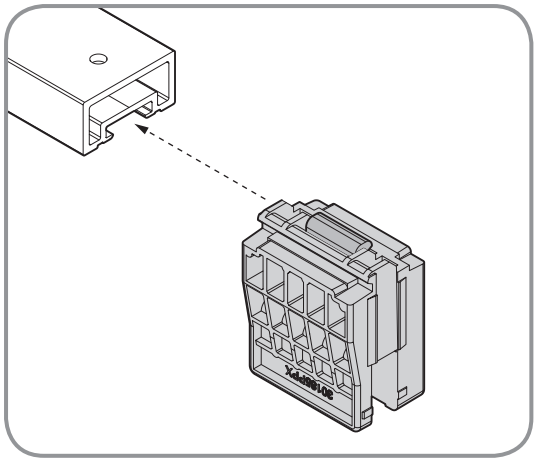

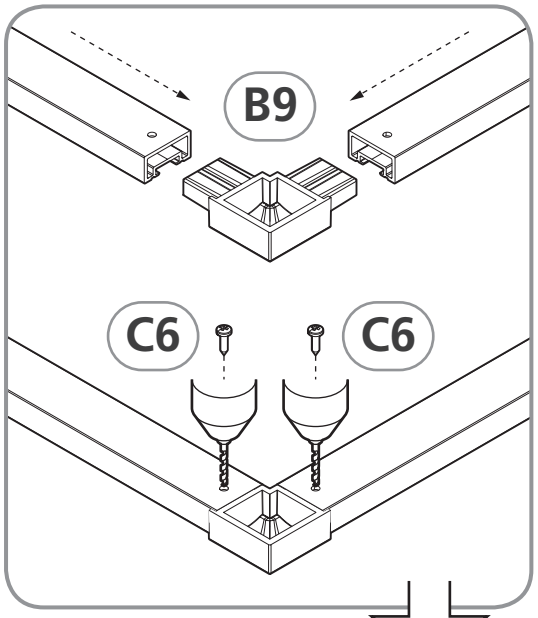
B9
C6
C6

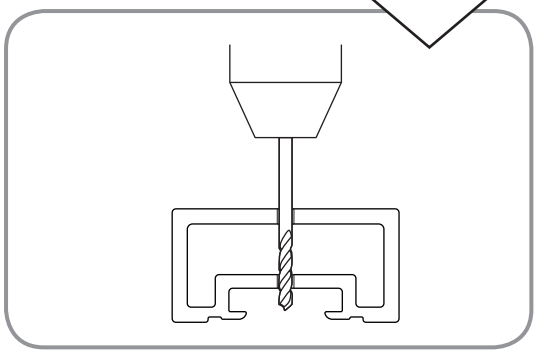

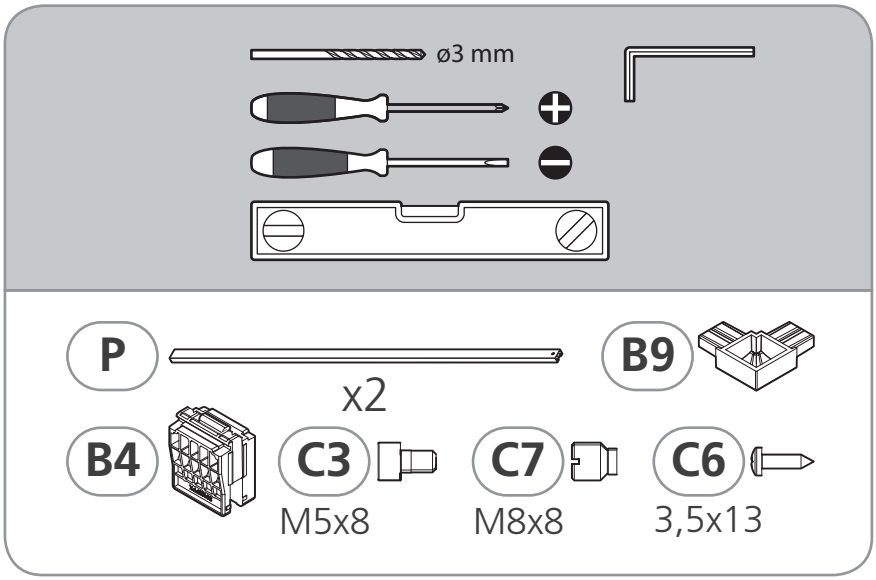
ø3 mm
P
x2
B9
B4
C3
M5x8
C7
M8x8
C6
3,5x13

8 kit 1 - kit 2 kit

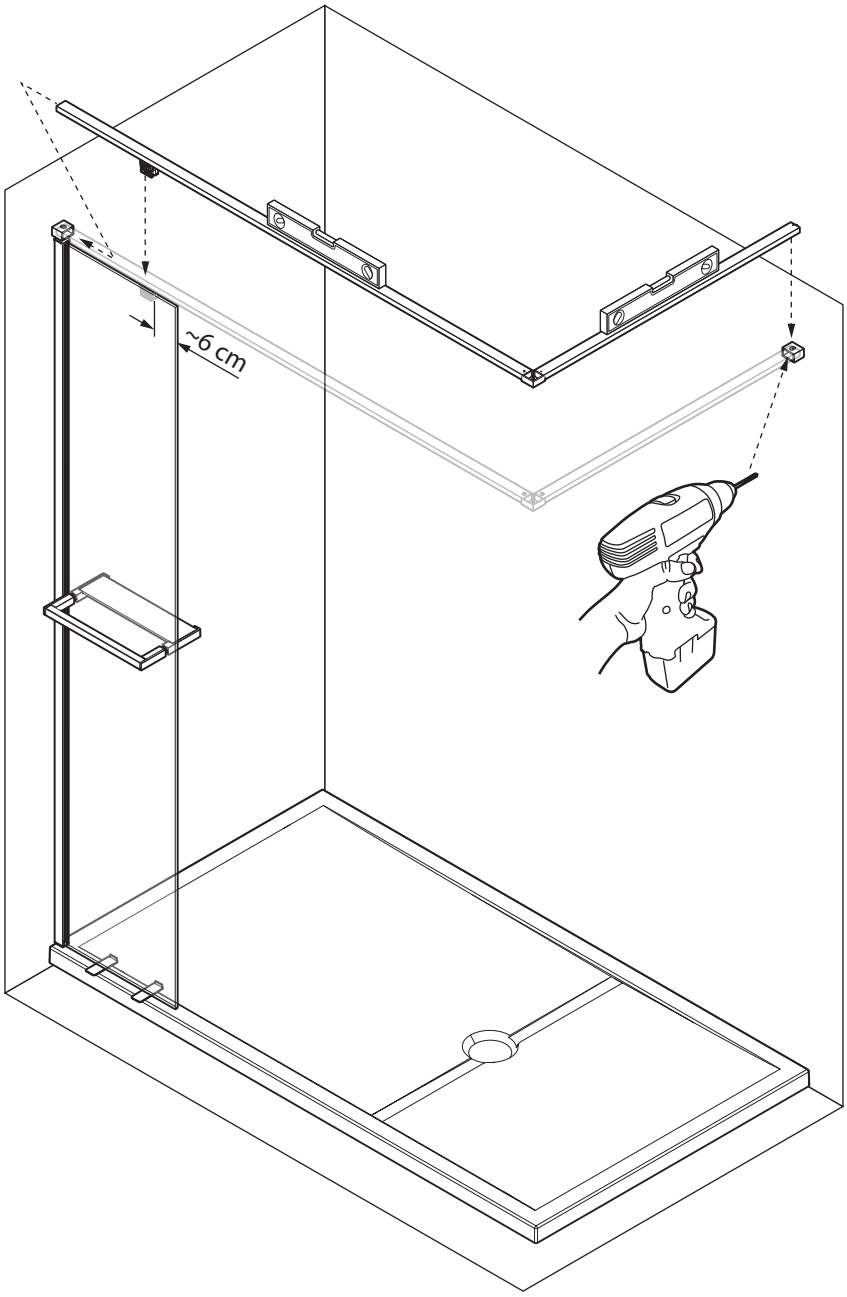

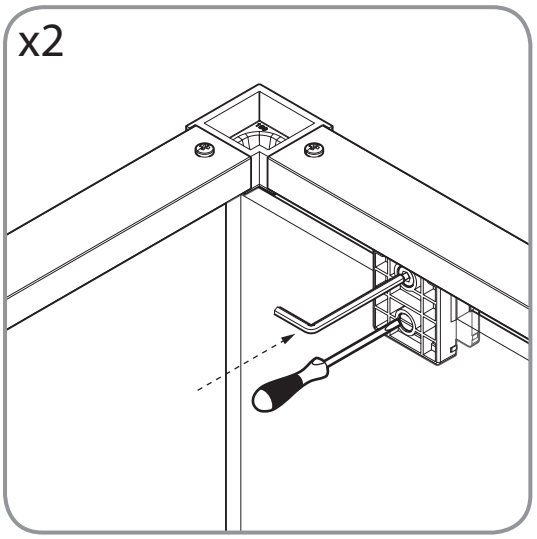

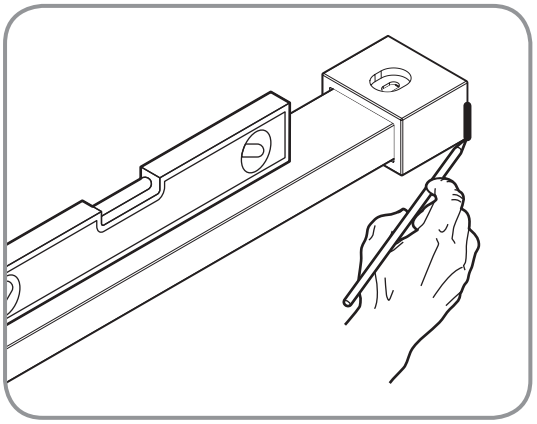

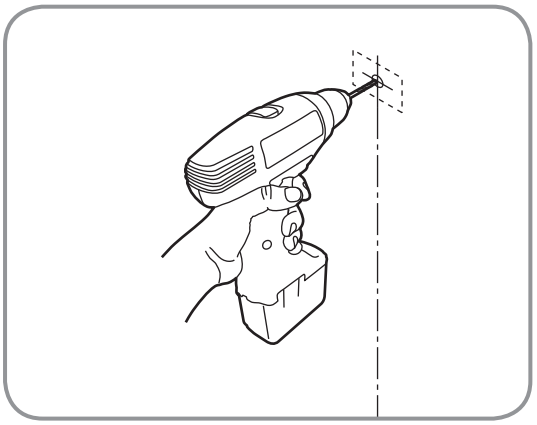

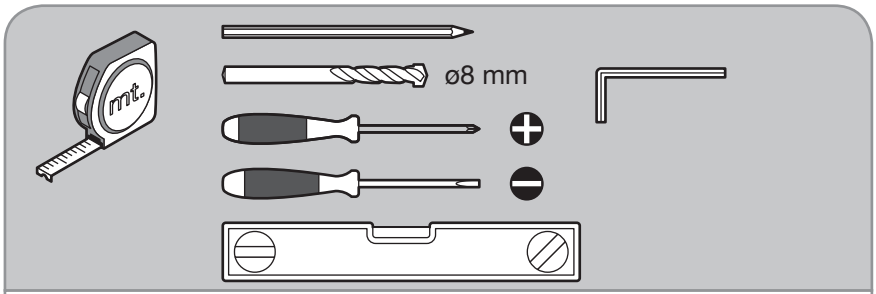

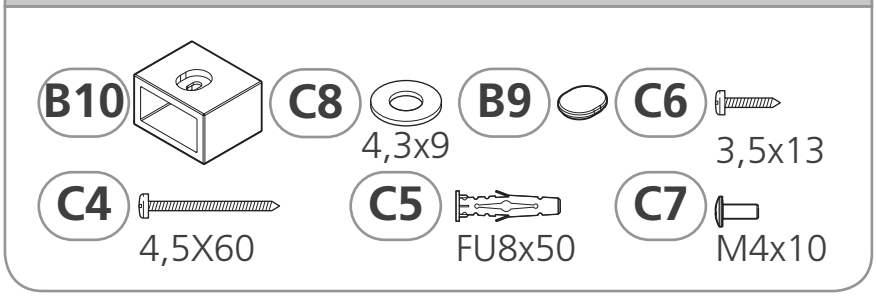

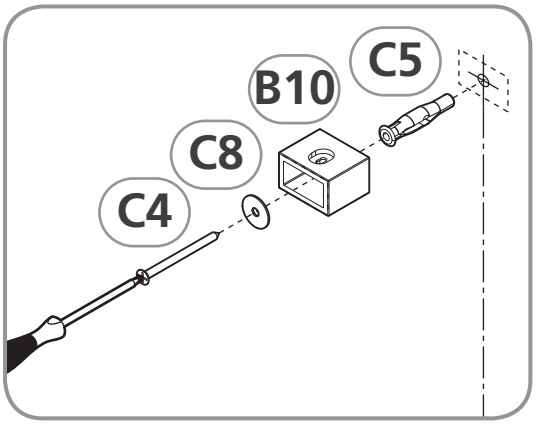

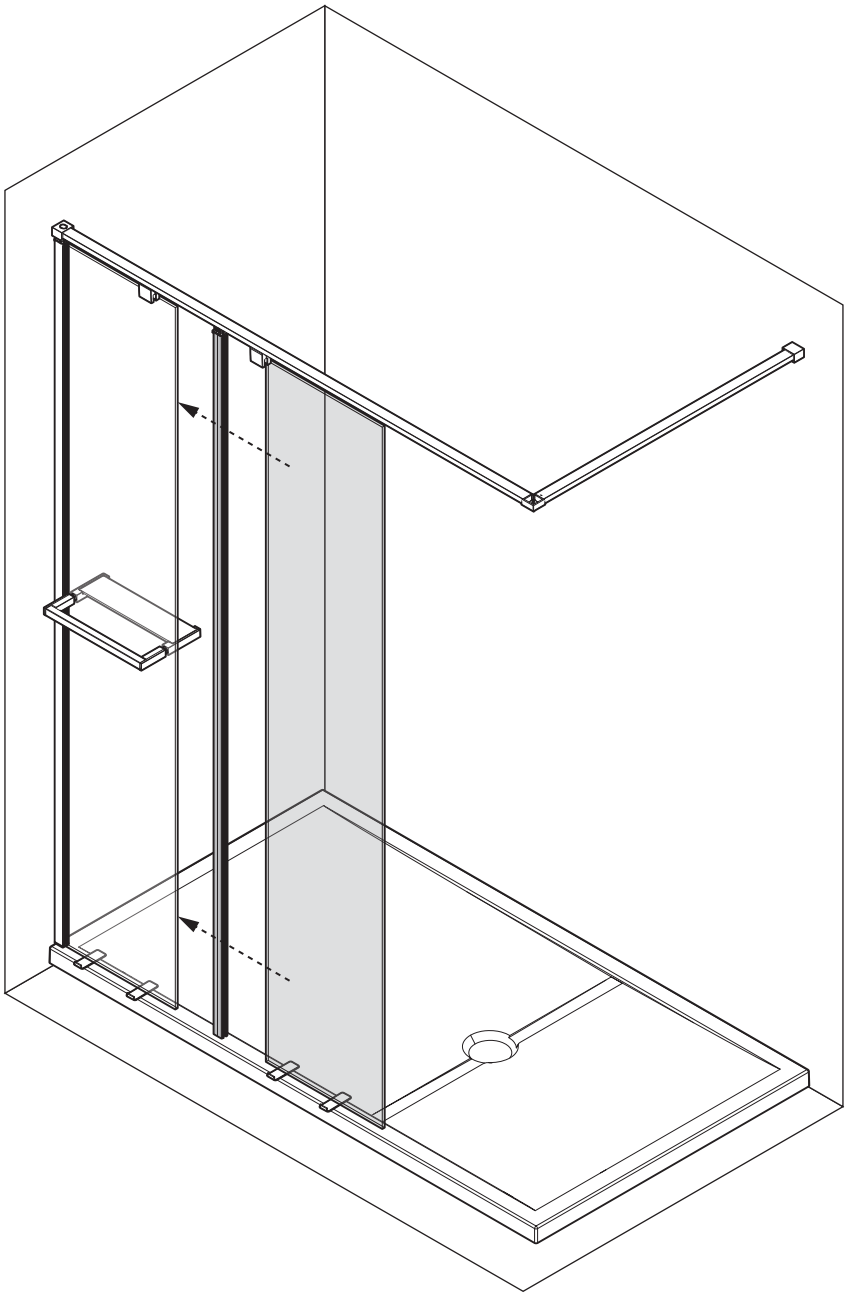

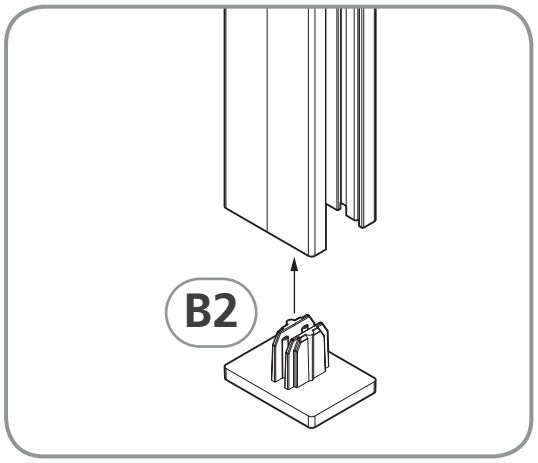
B2

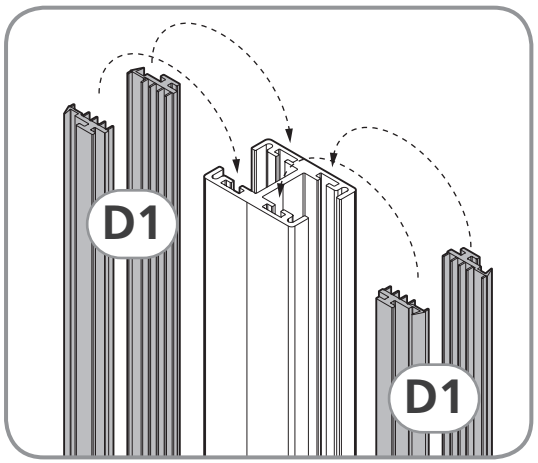
D1
D1

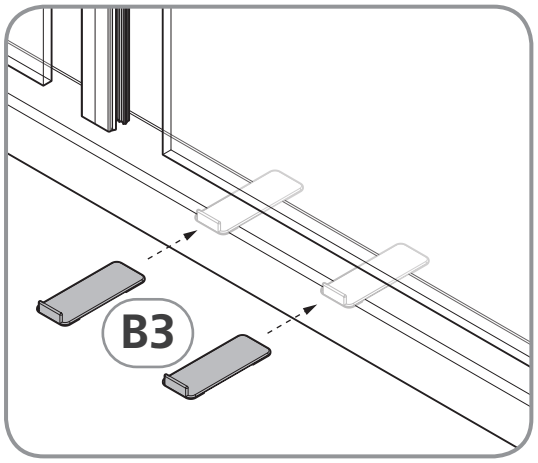
B3

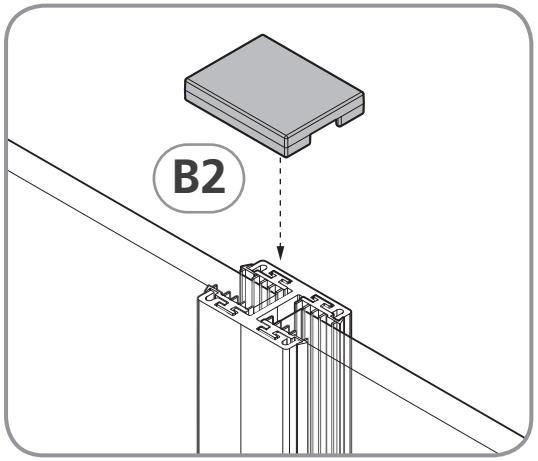
B2

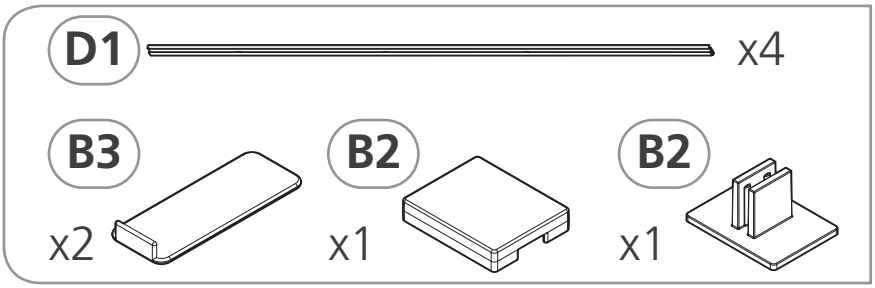
D1
x4
B3
x2
B2
x1
B2
x1

10 kit 1 - kit 2 kit

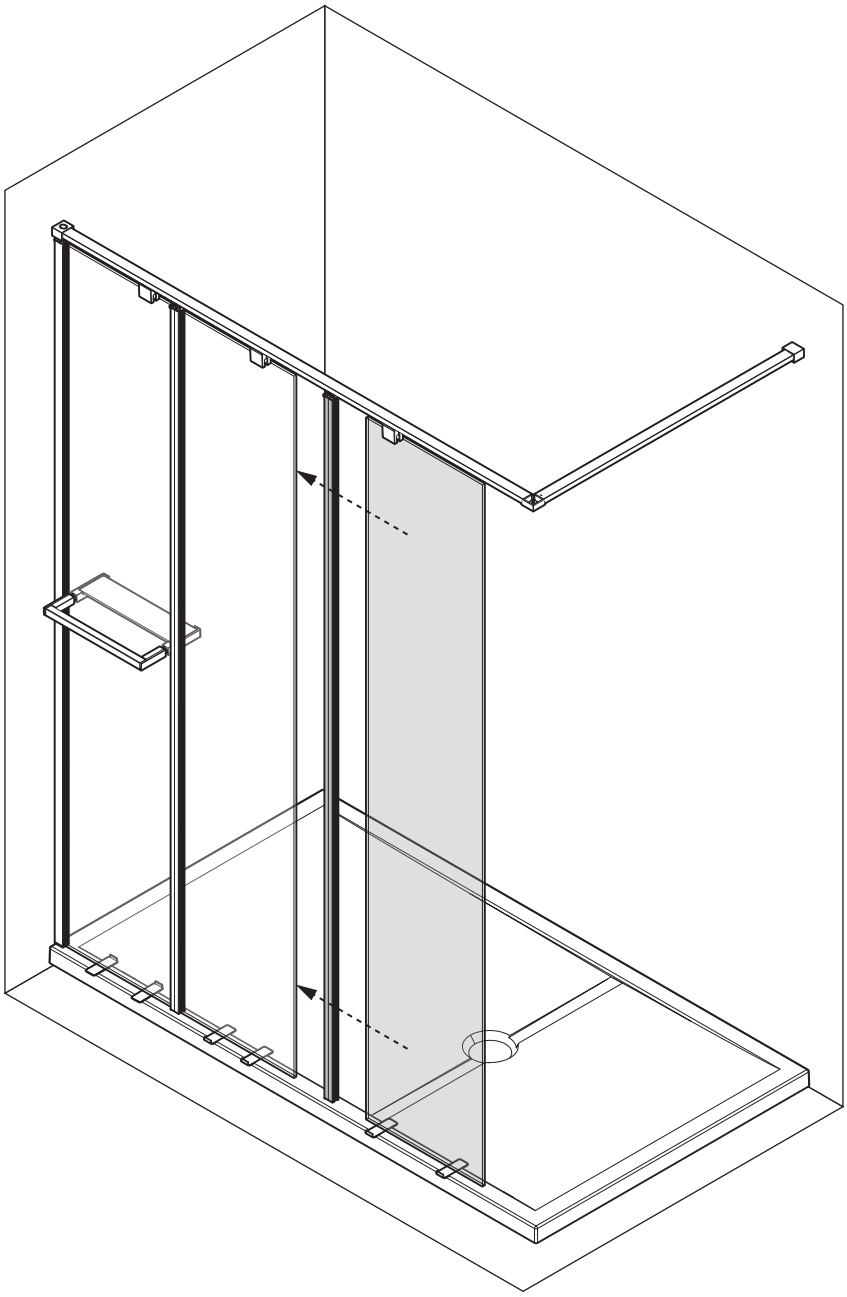

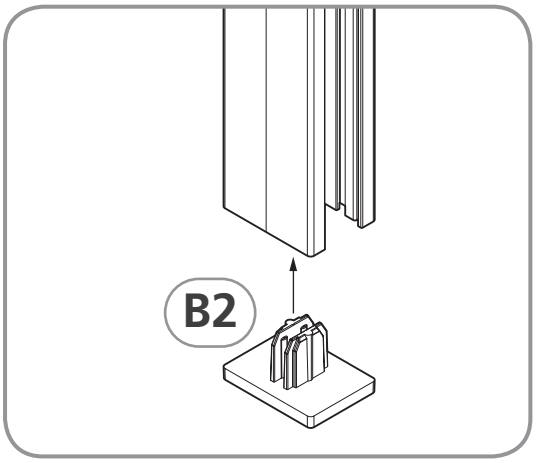

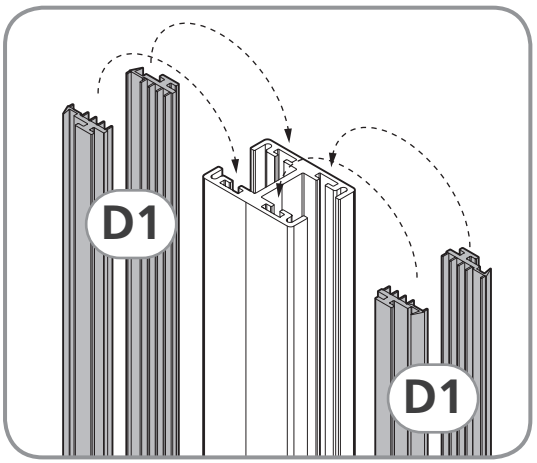

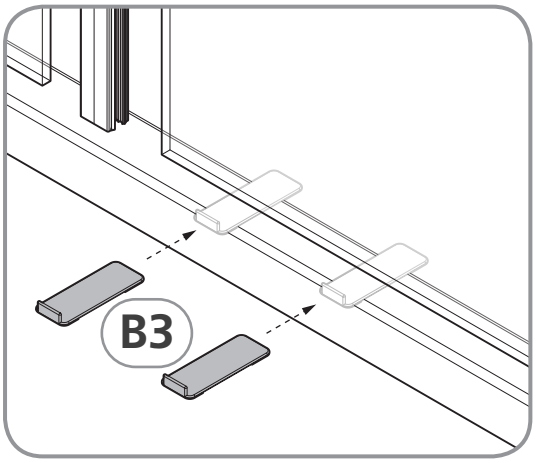

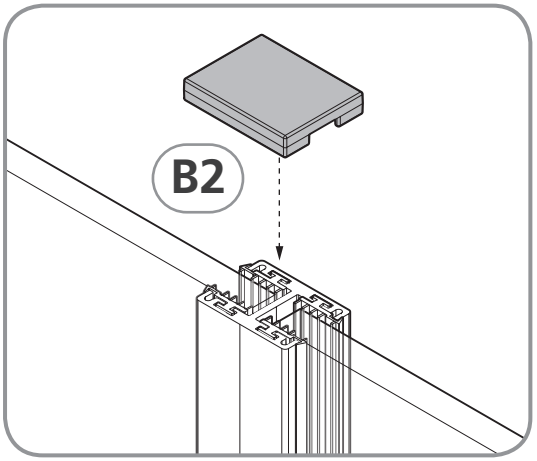

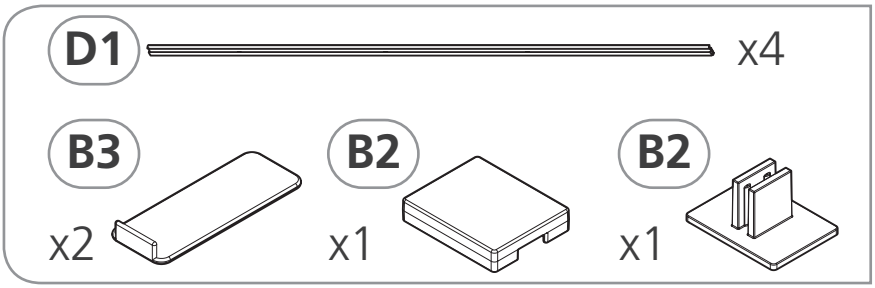

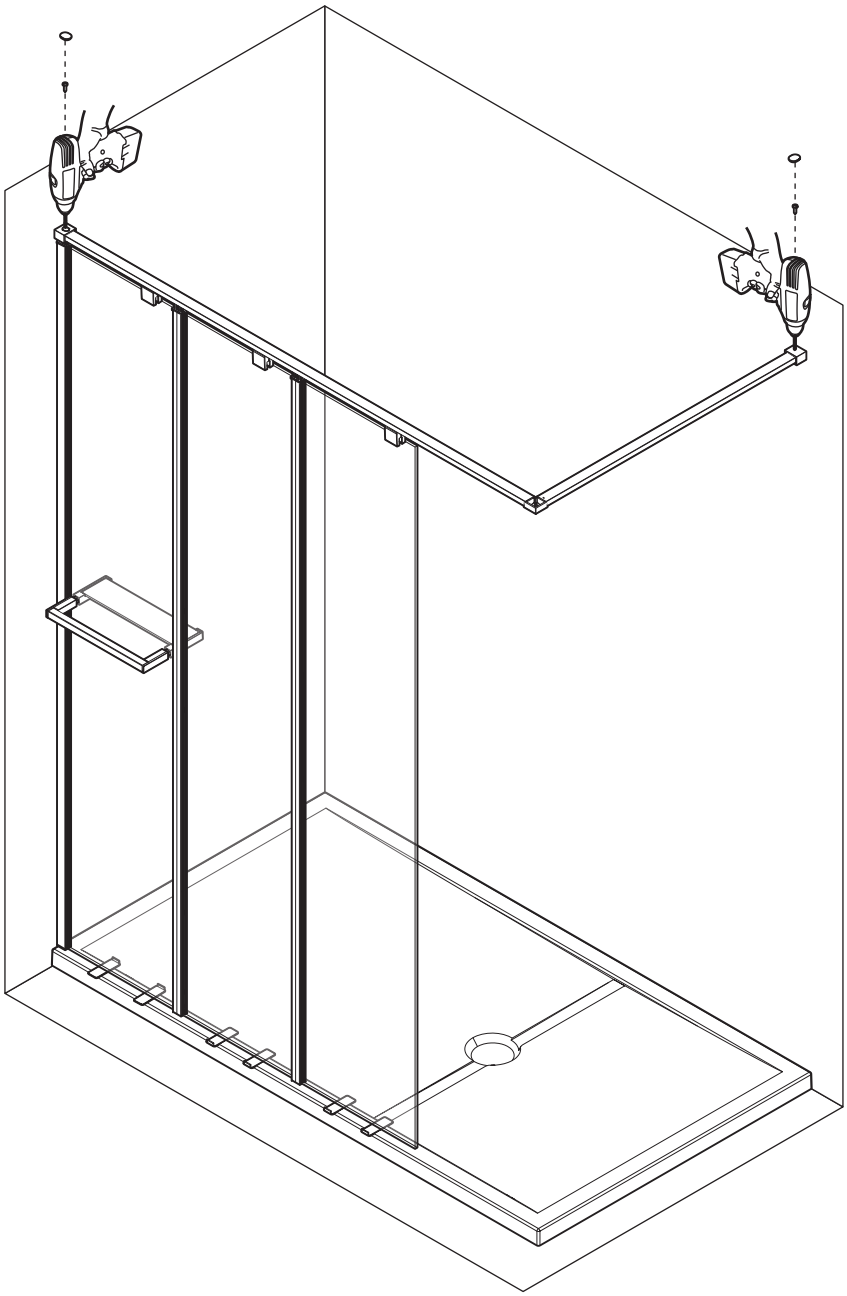

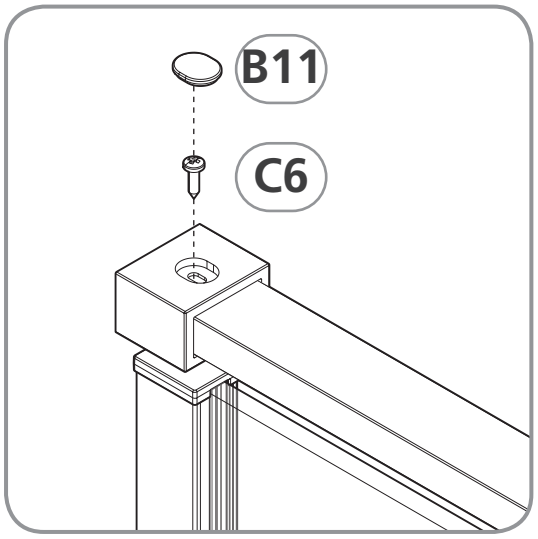
B11
C6

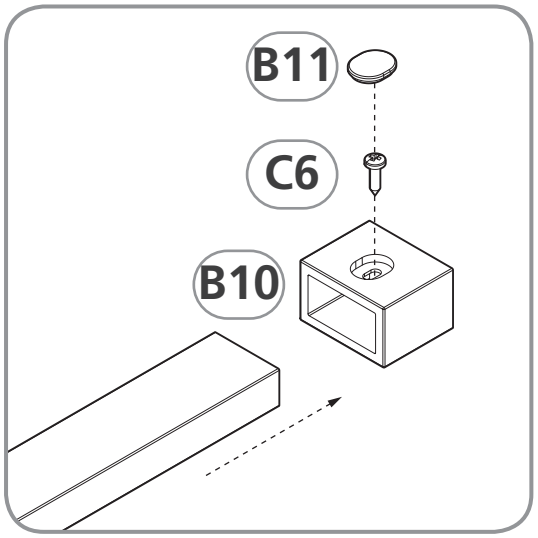
B11
C6
B10

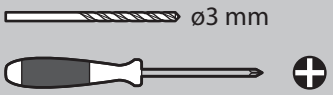
ø3 mm

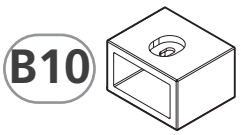
B10

B11

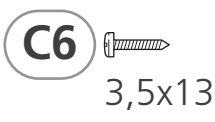
C6
3,5x13

12 kit 1 - kit 2 kit

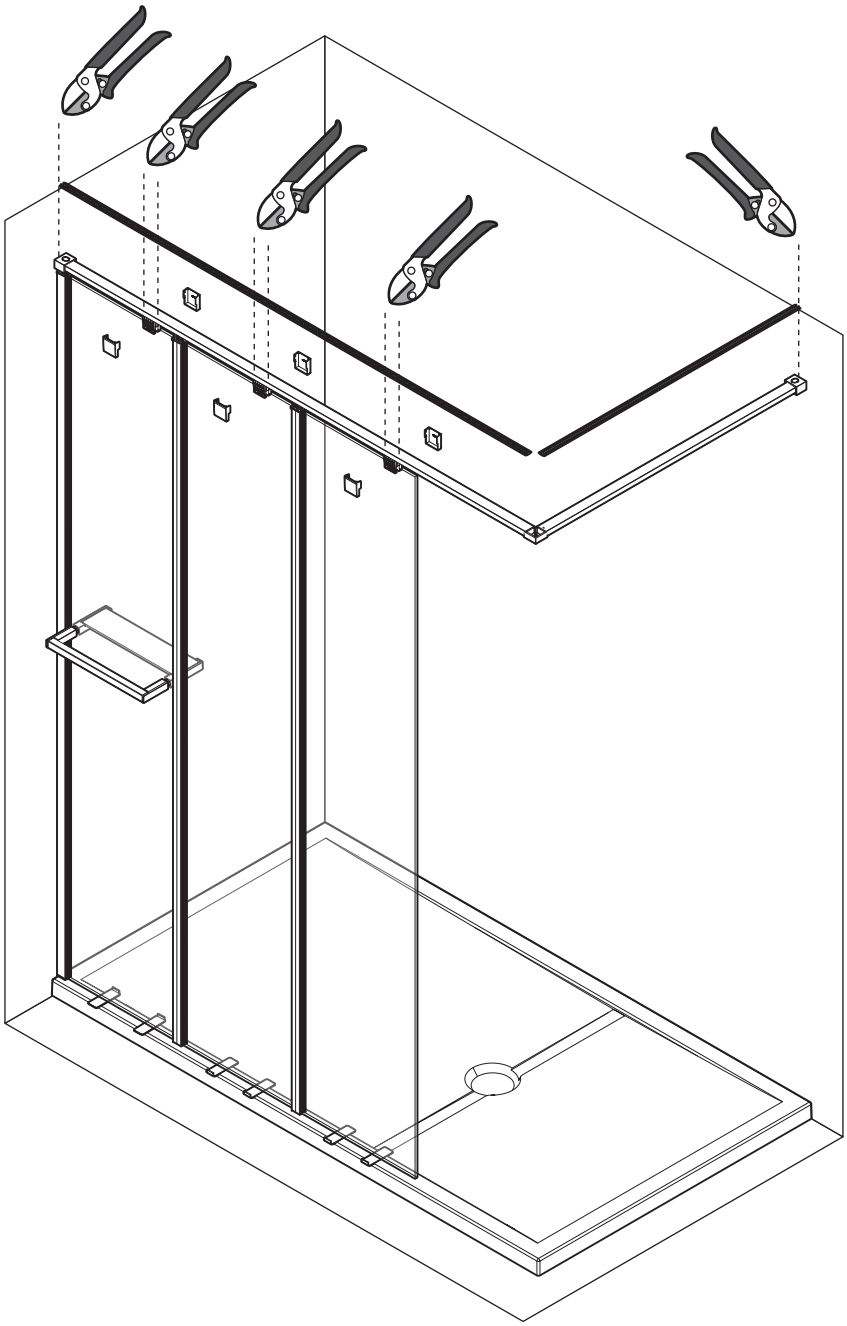

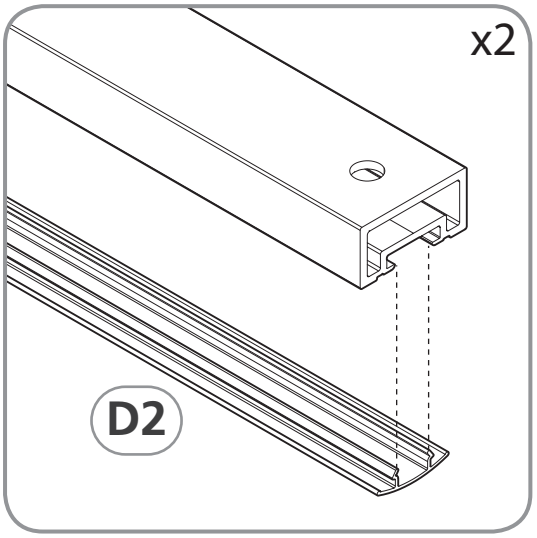

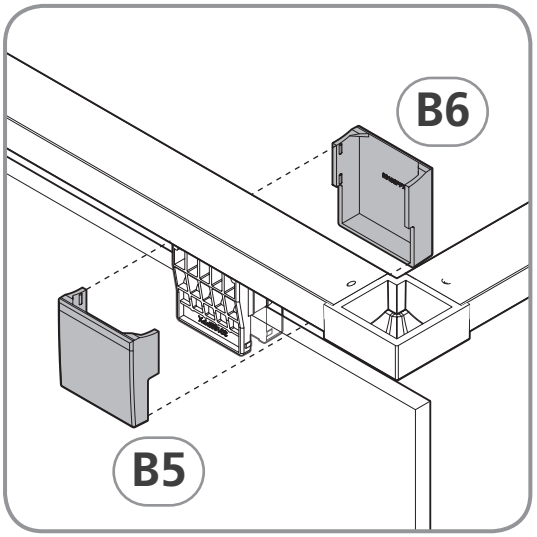

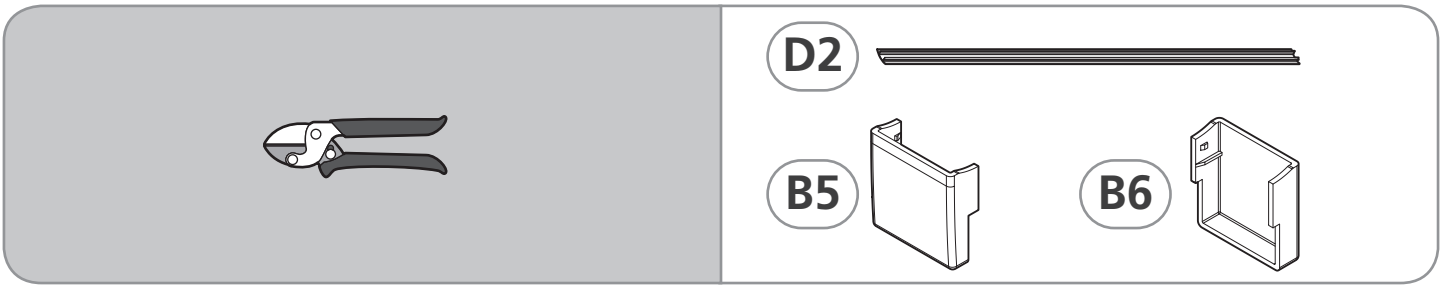

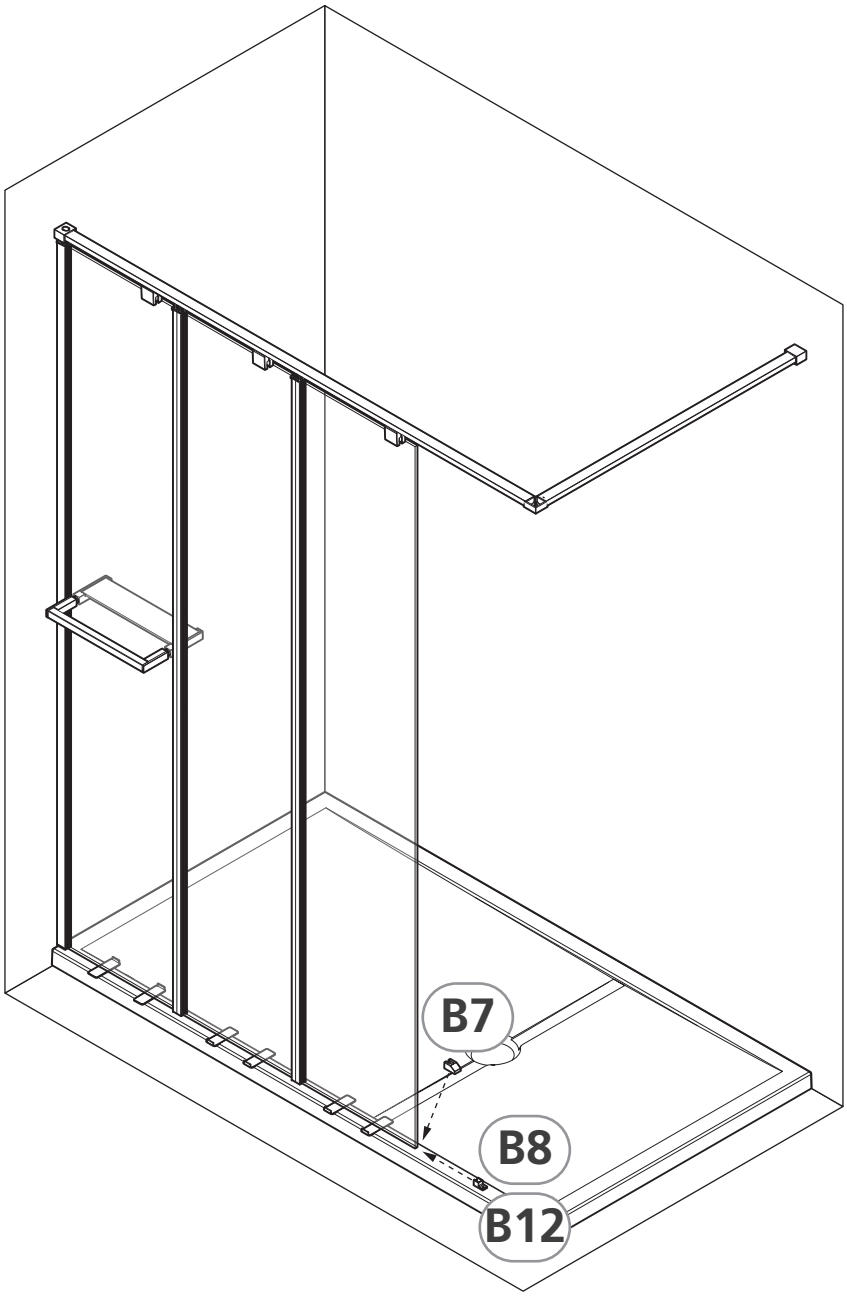

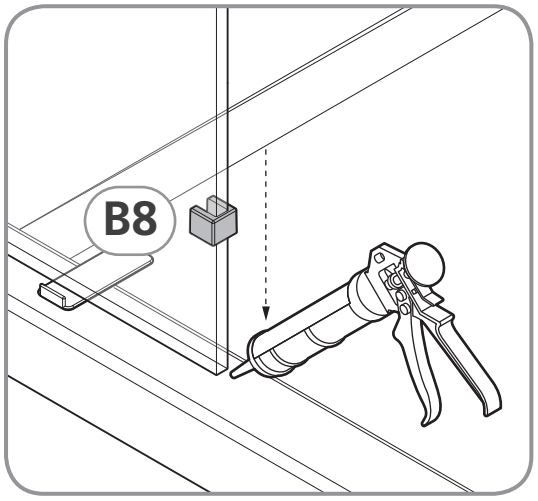

Ceramic/Acrilic

OU BIEN

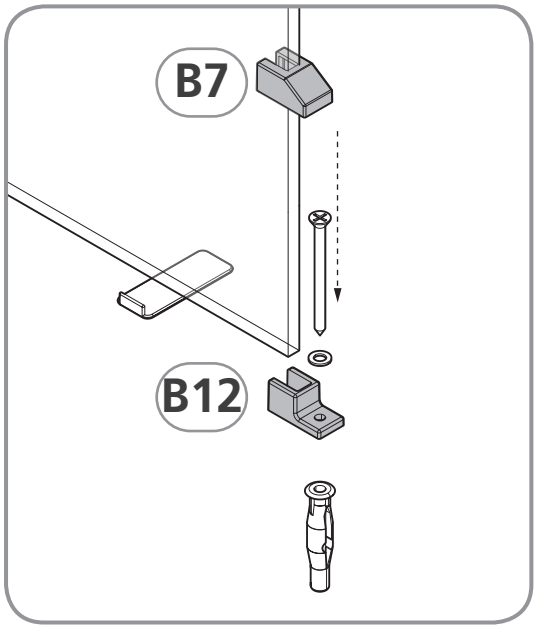

Sol/Carrelage

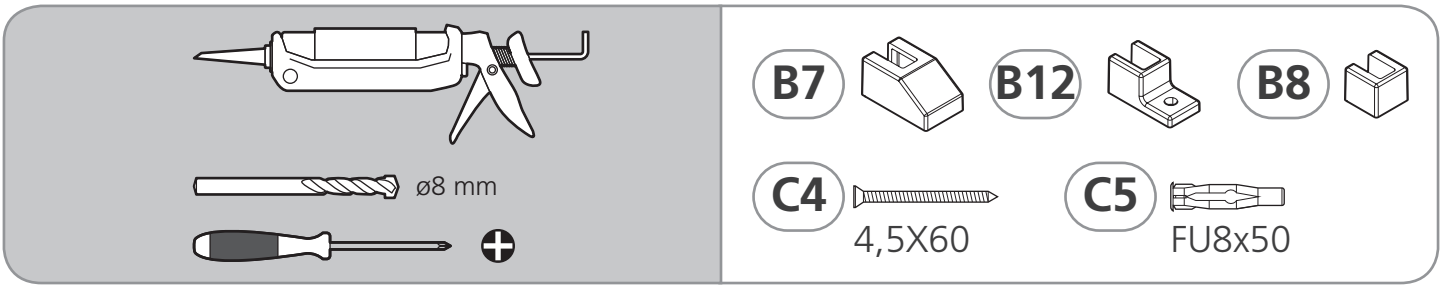

14 kit 1 - kit 2 kit

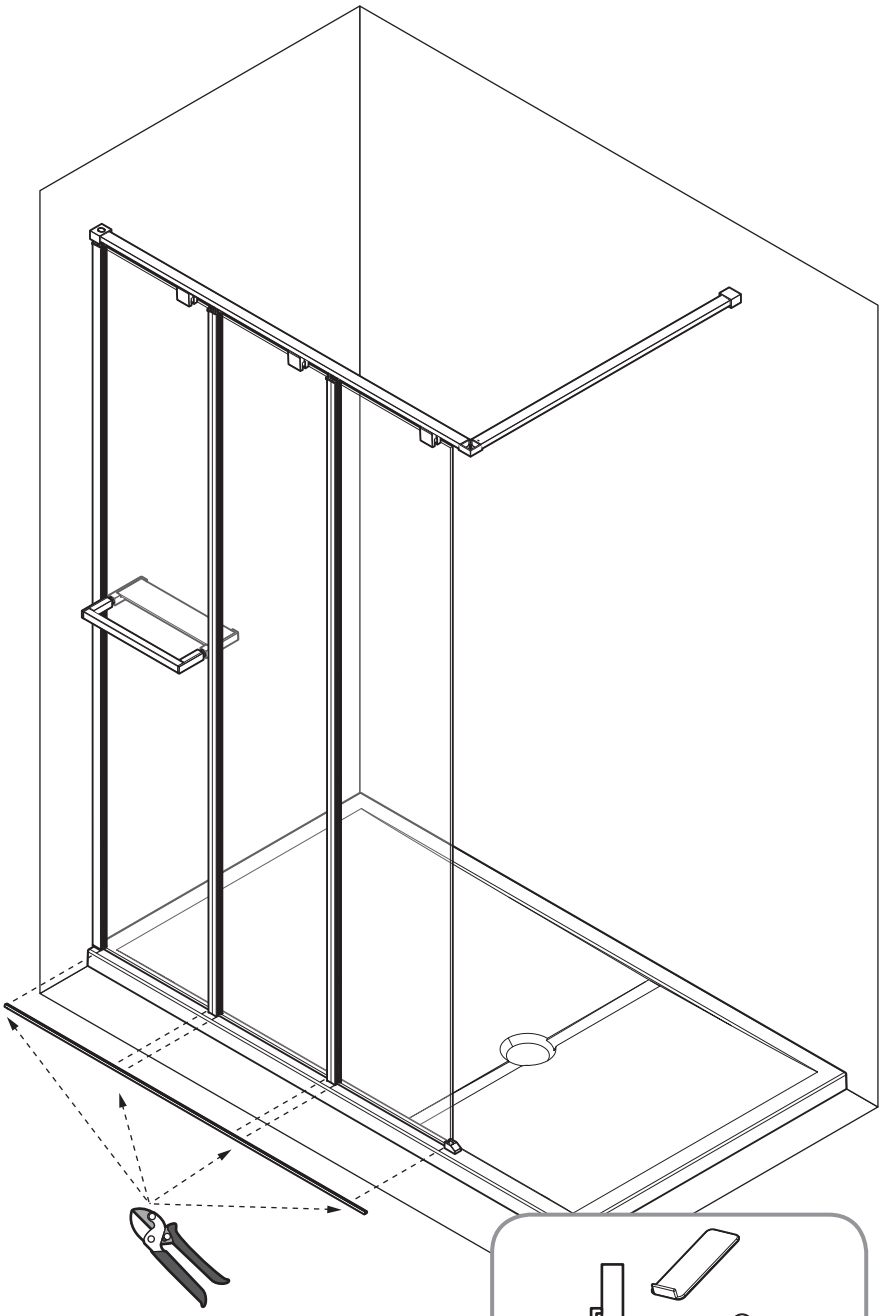

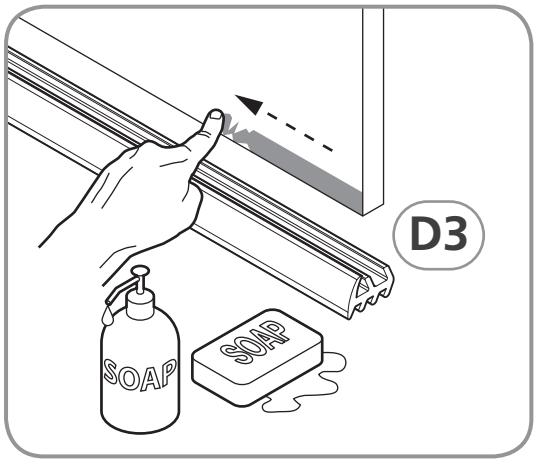

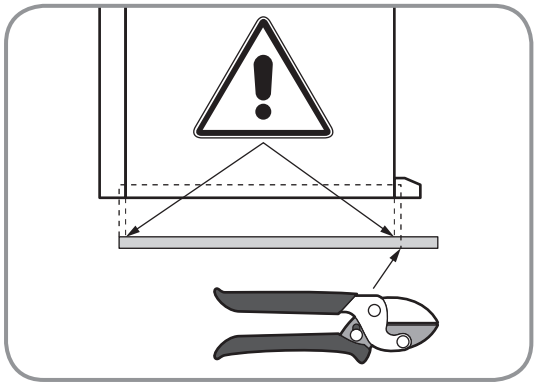

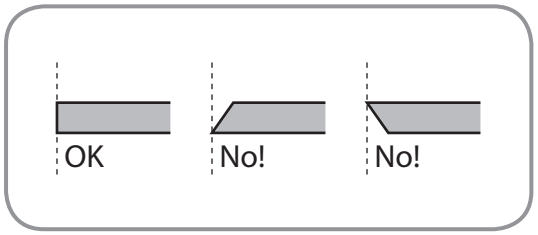

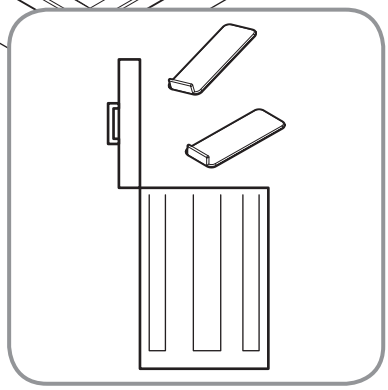

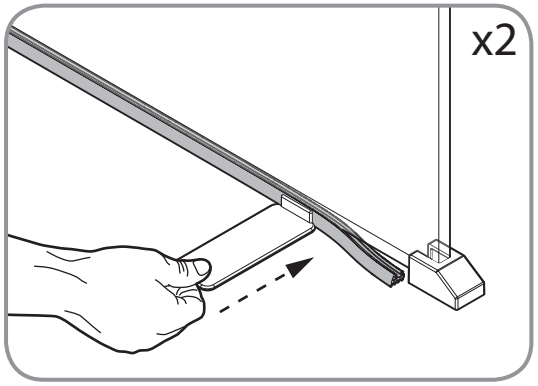

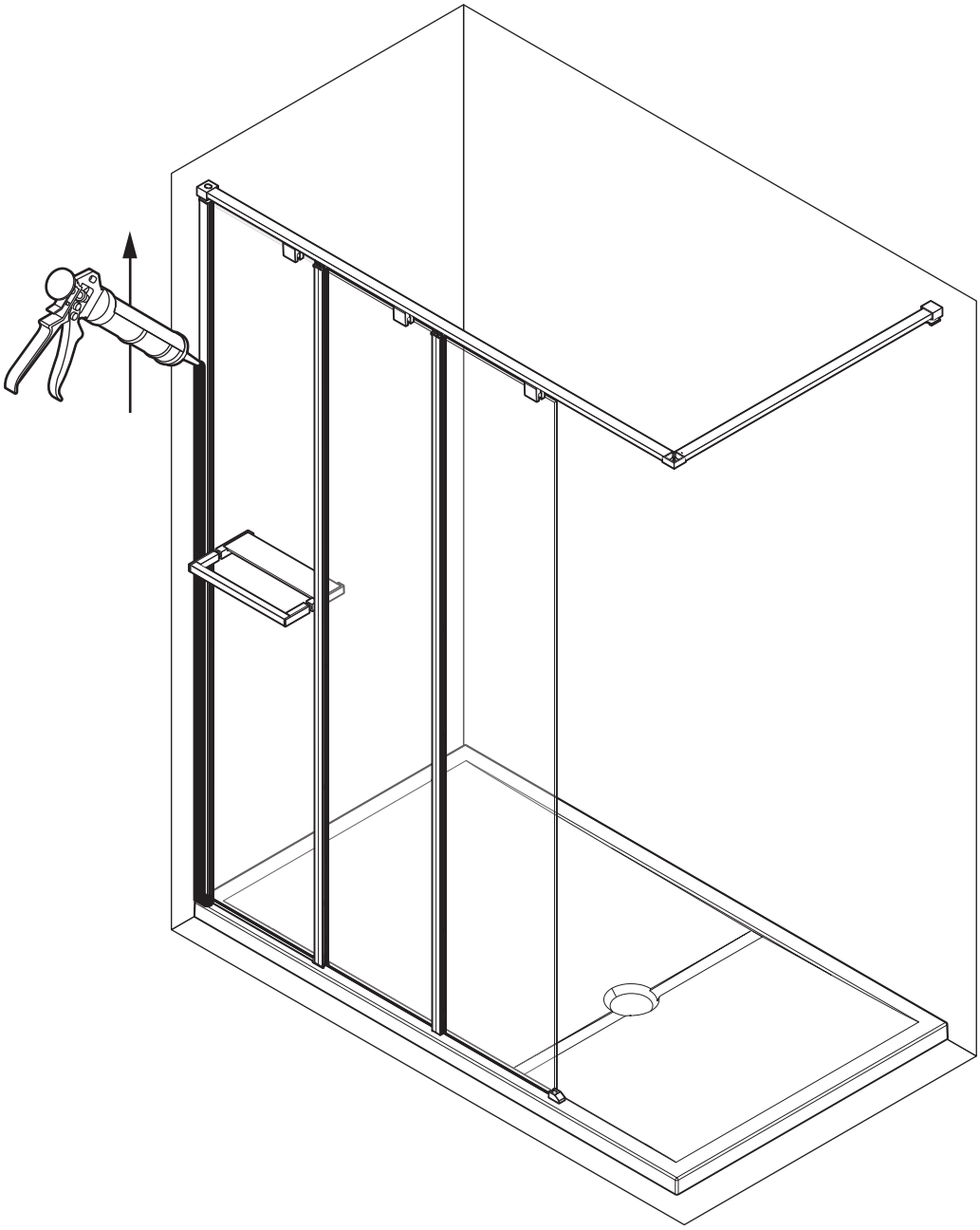

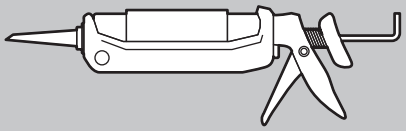

24h